ALPHA
OUTBACK
ENERGY

Alpha FXM 350

USER MANUAL

Table of Contents

1. Safety 5
1.1 Safety Symbols 5
1.2 General Warnings 6
1.3 Battery Safety 6
1.4 Work Environment Safety 7
1.5 Certifications and Compliances 8
2. General Description 9
2.1 Alpha FXM350 9
2.2 Micro350/ Alpha FXM350 9
2.3 FXM350 Front Panel 11
2.4 Micro350 Top Panel 13
3. Site Planning 14
3.1 Safety Precautions 14
3.2 Electromagnetic Compatibility (EMC) Requirements 15
3.3 Mounting Options for the Micro350 (XL and XL3) 15
3.4 Options for Communicating with the FXM 19
4. Unpacking the Equipment 20
4.1 Alpha FXM350/Micro350 Configuration 20
4.2 Unpacking 20
4.3 Optional Items 20
5. Installation 21
5.1 Installation of the Micro350 21
5.2 Mounting and wiring the FXM350 as a standalone device 27
5.3 Wiring the External Batteries and Optional Battery Heater Mats 29
5.4 Start-Up 31
6. Theory of Operation 32
6.1 Block Diagram 32
6.2 Modes of Operation 32
7. Operating the FXM350 36
7.1 Switching the Alpha FXM on and Off 36
7.2 Operating from the Control Panel Interface 37
7.3 Operating via the FXM Communication Module (Intranet or Internet) 44
7.4 The Alpha UPS Monitor Interface 67
7.5 HyperTerminal Interface 69
8. Maintenance 81
8.1 Updating the Software 81
8. 2 Testing and Replacing the Batteries 84
8.3 Preventive Maintenance 87
9. Troubleshooting 88
9.1 Procedure 88
10. Specifications 90
11. Warranty 93
12. Emergency Shutdown Procedure 94

List of Figures

Figure 1 — Micro350 cabinets 9
Figure 2 — FXM350 mounted in a standard Micro350 cabinet 10
Figure 3 — FXM 350 front panel description 11
Figure 4 — User input layout 12
Figure 5 — Contact Layout (Standard for C1 and C2) 12
Figure 6 — Micro350 Top Panel 13
Figure 7 — Mounting the Micro350 15
Figure 8 — Mounting on optional pedestal 16
Figure 9 — FXM350 Mounting Dimensions 16
Figure 10 — Rack-mount options 17
Figure 11 — FXM350 with ears for rack mounting 18
Figure 12 — Alpha FXM Communication Options 19
Figure 13 — Mounting to a wooden pole 21
Figure 14 — Securing the enclosure to the mounting bracket 22
Figure 15 — Attaching the mounting bracket to the wall studs 24
Figure 16 — AC Power distribution terminal blocks 24
Figure 17 — Wiring the Micro350 25
Figure 18 — Terminal block wiring 26
Figure 19 — Ferrite ring installed on RJ45 network cable 26
Figure 20 — FXM350 with rack-mount ears and signal assembly option (wiring box not shown) 27
Figure 21 — FXM350 Electrical Connections 28
Figure 22 — External Battery Wiring (for 48 VDC string (top) and 24 VDC string) 29
Figure 23 — Securing the batteries with the optional restraining bar 30
Figure 24 — FXM 350 block diagram 32
Figure 25 — Battery charging in line mode 34
Figure 26 — Back up power from batteries 34
Figure 27 — LCD Control Panel Logo Screen 37
Figure 28 — LCD Menu Tree 39
Figure 29 — Web GUI (UPS Specification Screen shown) 44
Figure 30 — Alpha UPS Monitor: UPS Communications screen 45
Figure 31 — Web GUI: UPS Specification screen 46
Figure 32 — Web GUI: Input & Output screen 46
Figure 33 — Web GUI: Battery & Inverter screen 47
Figure 34 — Web GUI: Relay & Load Shed screen 47
Figure 35 — Web GUI: User Input Status screen 48
Figure 36 — UPS Maintenance: Unit Configuration screen 48
Figure 37 — Restore all default commands 49
Figure 38 — UPS Maintenance: Battery screen 50
Figure 39 — UPS Maintenance: Inverter screen 51
Figure 40 — UPS Maintenance: Relay & Load Shed screen 52
Figure 41 — Programmable Timer Operation 53
Figure 42 — Time of Day Action Operation 53
Figure 43 — Time of Day Configuration 54
Figure 44 — Time of Day Action Status 54
Figure 45 — Assigning the Temperature trigger function to a dry contact – Alpha UPS Monitor. 55
Figure 46 — Setting the Temperature trigger value 55
Figure 47 — UPS Maintenance: Time & Date screen 56

Figure 48 — UPS Maintenance: Password screen 56
Figure 49 — User Input Configuration: Setting the Trigger Type 57
Figure 50 — User Input Configuration: Setting the Logic Level 57
Figure 51 — User Input Configuration: Setting an Action 57
Figure 52 — User Input Current Status 58
Figure 53 — User Input Current Status 58
Figure 54 — Alarms & Faults screen 59
Figure 55 — Event History screen 59
Figure 56 — Event Log Monitor screen 60
Figure 57 — Event Log Monitor, Open Event File window 61
Figure 58 — Alpha UPS Monitor: Upgrade Firmware 61
Figure 59 — Upgrade Communication Module 62
Figure 60 — Alpha UPS Monitor: Configure Site Information 62
Figure 61 — Configure SNMP screen 63
Figure 62 — Email Notification screen 63
Figure 63 — Test email feature 64
Figure 64 — Alpha UPS Monitor (UPS Specification Screen shown) 67
Figure 65 — Add or Remove Programs Window 68
Figure 66 — HyperTerminal communication parameters 69
Figure 67 — Main Menu Screen 70
Figure 68 — Menu Tree 71
Figure 69 — Temperature trigger function via HyperTerminal 77
Figure 70 — Typical Discharge Characteristics for Lead Acid Batteries 84
Figure 71 — Battery string example 96
Figure 72 — Edge Trigger 98
Figure 73 — Level Trigger 98
Figure 74 — Level Alternative 99

List of Tables

Table A — UPS Operating Modes 38
Table B — Control Menu 40
Table C — System Status Menu 42
Table D — List of Parameters 49
Table E — Line Status (see Figure 67) 72
Table F — Output Status (see Figure 67) 72
Table G — Faults (see Figure 67) 73
Table H — Alarms (see Figure 67) 73
Table I — Maintenance Submenu 74
Table J — Dry Contact Configuration Settings 75
Table K — Setting the Timer Contact 76
Table L — Setting the Date and Time 78
Table M — Event Codes 80
Table N — Battery Temperature Compensation Values 85
Table O — Alarm Submenu 88
Table P — Fault Submenu 89
Table Q — Problems Not Reported by System 89
Table R — Mechanical Specifications 90
Table S — Electrical Specifications 91
Table T — Boost/Buck/Line Transfer Thresholds 99
Table U — Regulatory 99

1. Safety

SAVE THESE INSTRUCTIONS: This manual contains important safety instructions that must be followed during the installation, servicing, and maintenance of the product. Keep it in a safe place. Review the drawings and illustrations contained in this manual before proceeding. If there are any questions regarding the safe installation or operation of this product, contact Alpha and Outback Energy or the nearest AOE representative. Save this document for future reference.

1.1 Safety Symbols

To reduce the risk of injury or death, and to ensure the continued safe operation of this product, the following symbols have been placed throughout this manual. Where these symbols appear, use extra care and attention.

The use of ATTENTION indicates specific regulatory/code requirements that may affect the placement of equipment and /or installation procedures.

NOTE:

A NOTE provides additional information to help complete a specific task or procedure. Notes are designated with a checkmark, the word NOTE, and a rule beneath which the information appears.

CAUTION

CAUTION indicates safety information intended to PREVENT DAMAGE to material or equipment. Cautions are designated with a yellow warning triangle, the word CAUTION, and a rule beneath which the information appears.

WARNING!

WARNING presents safety information to PREVENT INJURY OR DEATH to personnel. Warnings are indicated by a shock hazard icon, the word WARNING, and a rule beneath which the information appears.

HOT!

The use of HOT presents safety information to PREVENT BURNS to the technician or user.

1.2 General Warnings

You must read and understand the following warnings before installing the product. Failure to do so could result in personal injury or death.

- Read and follow all instructions included in this manual.
- Only qualified personnel are allowed to install, operate and service this system and its components.

CAUTION

Risk of Electric Shock. See Installation Instruction before connecting to the supply.

- The FXM350/ Micro350 is only intended for restricted access locations
- The UPS shall be connected only to a dedicated branch circuit.

CAUTION

To reduce the risk of fire, connect only to a maximum branch circuit overcurrent protection in accordance with the National Electrical Code, ANSI/NFPA 70.

- Always assume electrical connections or conductors are live. Switch all circuit breakers and double check connections with a voltmeter before performing installation or maintenance.
- A disconnect switch shall be provided by others for the AC input and AC output circuits.
- The branch circuit overcurrent protection for the AC input and AC output circuit shall be provided in the end installation.
- Place warning label(s) on the utility panel to tell emergency personnel that a UPS is installed.
- Use only proper lifting techniques whenever handling equipment, parts, or batteries.
- Ferules or the equivalent must be used when stranded wire is used on the AC input and output terminal blocks.

WARNING!

The Alpha FXM350/ Micro350 have more than one live input circuit. AC power may be present at the outputs even if the system is disconnected from line or battery power.

CAUTION

The Alpha FXM350/ Micro350 metal surfaces can be very hot to the touch.

1.3 Battery Safety

- Battery Installation and servicing should be performed or supervised by personnel knowledgeable about batteries and the required precautions performed.
- Be extra cautious when connecting or adjusting battery cabling. An improperly connected battery cable or an unconnected battery cable can result in arching, fire or explosion.
- Before attaching the batteries to the Alpha FXM350/ Micro350, make sure that the polarity is correct.
- Use new batteries when installing a new unit. Verify that all batteries are the same type with identical date codes.
- When replacing batteries, use sealed lead acid batteries, rated 12 V. Never install old or untested batteries.
- Batteries that show signs of cracking, leaking or swelling must be replaced immediately by authorized personnel using a battery of identical type and rating.

CAUTION

Never open, damage or mutilate batteries. Released Electrolyte is harmful to the skin and eyes. It may be toxic and hazardous to the environment.

- Never dispose of batteries in a fire. The batteries may explode. Follow the manufacturer's directions and check with your local jurisdictions for safe battery disposal.
- If electrolyte splashes on your skin, immediately wash the affected area with water. If electrolyte gets into your eyes, wash them for at least 10 minutes with clean running water or special neutralizing eye wash solution. Seek medical attention at once.
- Neutralize spilled electrolyte with special neutralizing solution and a "spill kit" or solution of 1 lbs (0.45KG) of baking soda (bicarbonate of soda) in 1 gallon (3.8 L) of water.

CAUTION

A battery can present a risk of electrical shock and high short-circuit current. The following precautions should be observed when working on batteries:

a. Remove watches, rings, or other metal objects.
b. Use tools with insulated handles.
c. Wear rubber gloves and boots.
d. Do not lay tools or metal parts on top of batteries.
e. Disconnect the charging source before connecting or disconnecting battery terminals.
f. Determine if the battery is inadvertently grounded. If inadvertently grounded, remove the source from the ground. Contact with any part of a grounded battery can result in electrical shock. The likelihood of such shock can be reduced if the grounds are removed during installation and maintenance (applicable to equipment and remote battery supplies not having a grounded supply circuit). Never let live battery wires touch the Alpha FXM350/ Micro350, the enclosure or any other metal objects. This can cause a fire or explosion.

- Do not smoke or introduce sparks in the vicinity of a battery.
- If the batteries have been in storage for more than 3 months, recharge them for at least 24 hours and then test them with a load before installation.
- Each AlphaCellTM battery has a date code found on the warning label which must be recorded in the maintenance log. If non-Alpha batteries are used, see the manufacturer's documentation for date code type and placement.

1.4 Work Environment Safety

- Do not work alone under hazardous conditions.
- Keep the chassis area clear and dust-free during and after the installation.
- Keep tools away from walk areas where you or others could fall over them.
- Wear safety glasses when working under any conditions that might be hazardous to your eyes.
- Do not work on the unit or connect or disconnect cables during periods of lightning activity.

1.5 Certifications and Compliances

The Alpha FXM350 and Micro350, has been designed, manufactured, and tested to the requirements of the following national and international safety standards:

- CAN/CSA-C22.2 No. 107.3-05 – Uninterruptible Power Systems; additional requirements (RD): CAN/ CSA-C22.2 No. 60950-1-03 - Information Technology Equipment - Safety.
- UL 1778 (Edition 4) – Uninterruptible Power Systems; additional requirements (RD): UL 60950-1 (Edition 1) - Information Technology Equipment - Safety.
- FCC CFR47 Part 15 Class A – This equipment has been tested and found to comply with the limits for a Class A digital device pursuant to part 15 of the FCC Rules. These limits are designed to provide reason- able protection against harmful interference when the equipment is operated in a commercial environment. This equipment generates, uses, and can radiate radio frequency energy and, if not installed and used in accordance with the instruction manual, may cause harmful interference to radio communications. Operation of this equipment in a residential area is likely to cause harmful interference in which case the user will be required to correct the interference at his own expense.
- Industry Canada - This Class A digital device apparatus complies with Canadian ICES-003.
- Industry Canada - Cet appareil numrique de la Classe A est conformé la norme NMB-003 du Canada.

2. General Description

2.1 Alpha FXM350

The Alpha FXM350 is available in 24Vdc and 48Vdc models. It provides up to 350W of regulated AC Power to the load, when utility power is available, and provides back up power from the batteries in case of a utility power failure. Noteworthy features include:

- Local or remote monitoring and control via USB and SNMP communication
- Small footprint for wall, rack or enclosure mounting
- Dependable operation in extreme operating environments (-40 to 74°C or -40 to 165°F)
- Powerful firmware with enhanced features such as battery run-time information

2.2 Micro350/ Alpha FXM350

The Micro350 contains a standard FXM350 along with batteries—Figure 1 shows three options for the enclosure. These enclosures are designed with a NEMA 3R rating for outdoor applications.

Figure 2 shows the FXM350 installed in a standard-sized Micro350 cabinet. Power is distributed through terminal blocks mounted on a DIN rail.

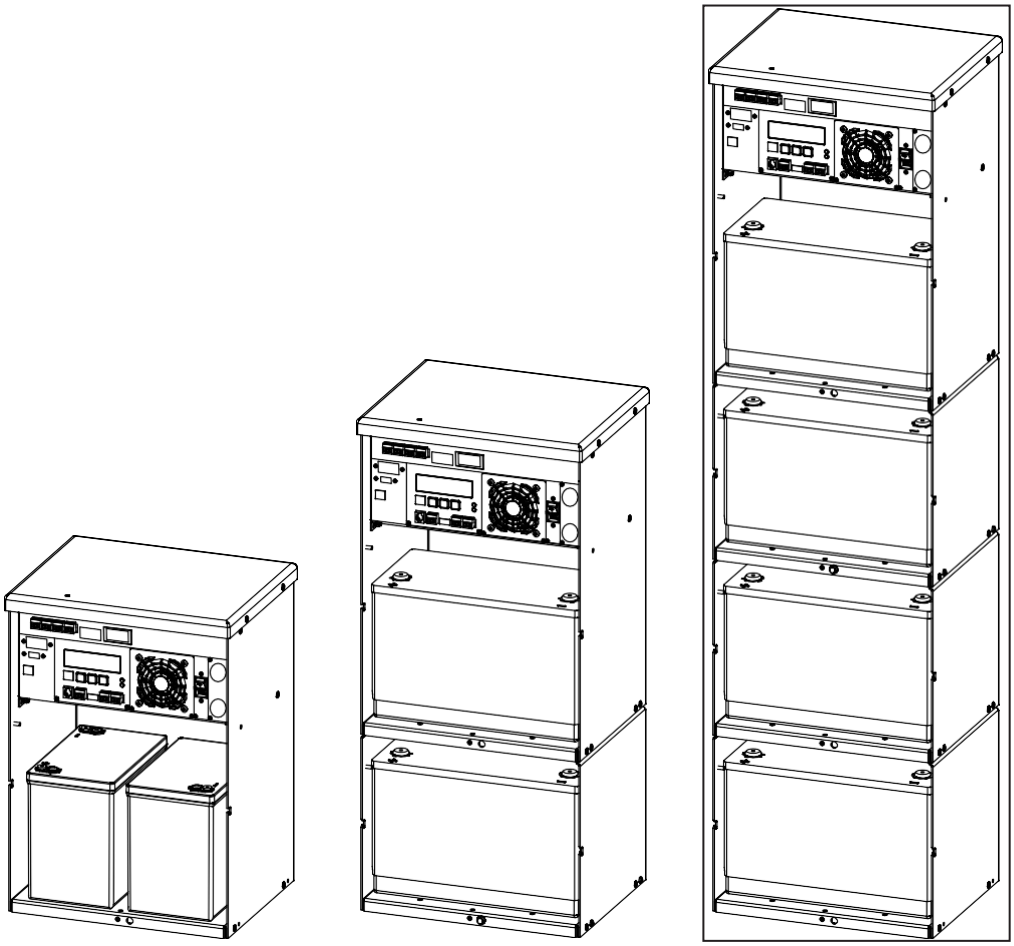

(a) Standard Micro350 (1 battery tray) (b) Micro350 XL (2 battery trays) (c) Micro350 XL3 (4 battery trays)

Figure 1 — Micro350 cabinets

In addition to the FXM350 standard features, the unit also includes the following:

- Three additional user-configurable dry contacts and two additional user inputs (top panel in Figure 2)
- Door sensor switch for increased security
- AC Input and outputs on an easy to install terminal block
- Flexible dual AC and DC output for multiple loads up to 350W with distribution

AC input	Battery bus voltage	AC output (dual)
120Vac	48V or 24V	120/24Vac
230Vac	24V	230/24Vac

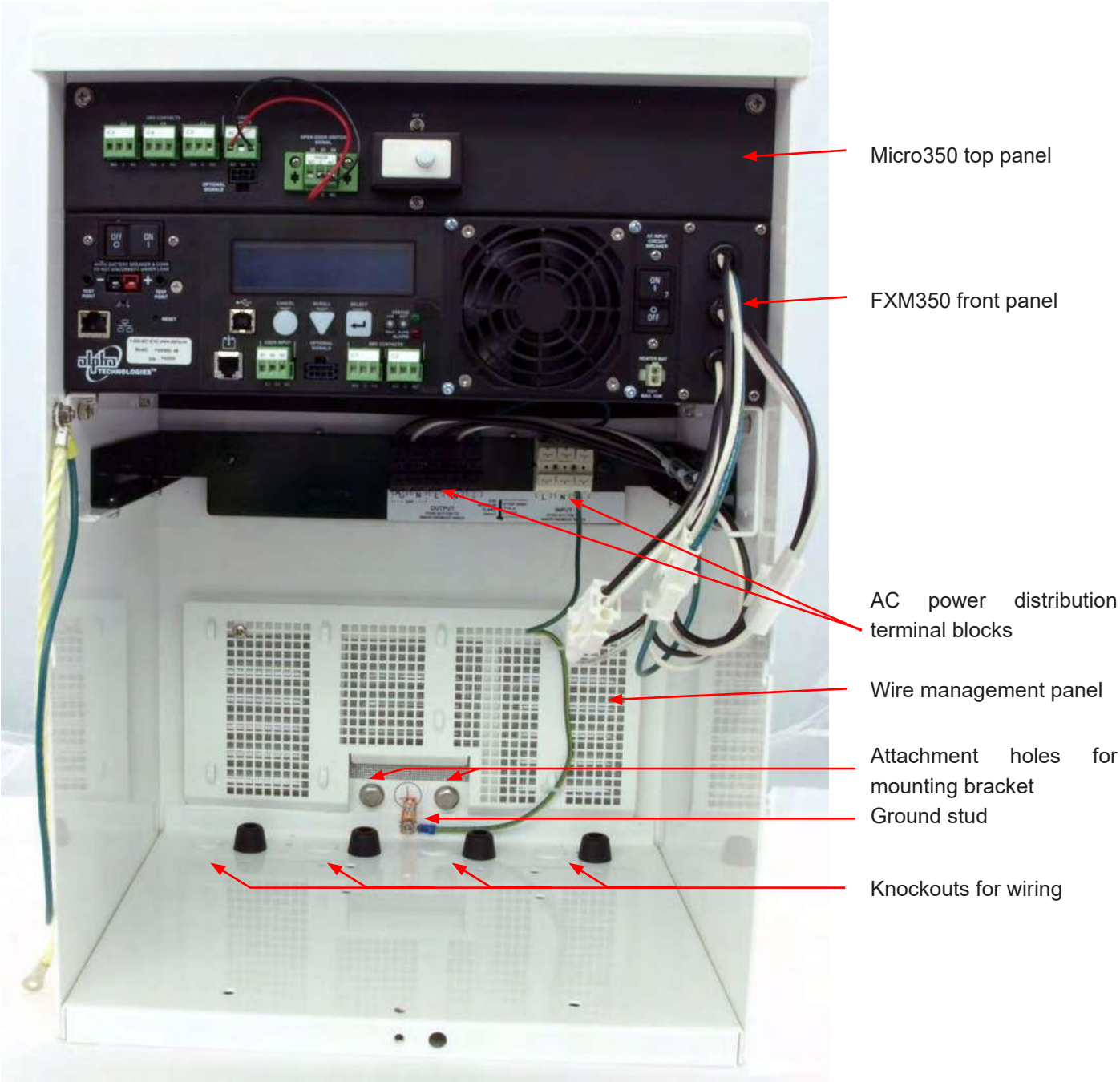

Figure 2 — FXM350 mounted in a standard Micro350 cabinet

2.3 FXM350 Front Panel

The following table and Figure 3 identify the main features of the FXM350 which are described in detail in the following pages.

Item	Description	Item	Description
1	Battery breaker	8	Optically isolated user inputs
2	Battery connector	9	Additional user inputs and dry contacts connector
3	RJ45 communication module connector	10	Status and alarm LEDs
4	LCD control panel and menu navigation buttons	11	Configurable dry contacts, C1 and C2
5	USB communication connector	12	Replaceable fan assembly
6	Battery temperature sensor connector	13	AC input circuit breaker
7	Battery voltage test points	14	Battery heater mat connector
		15	AC input/output connections

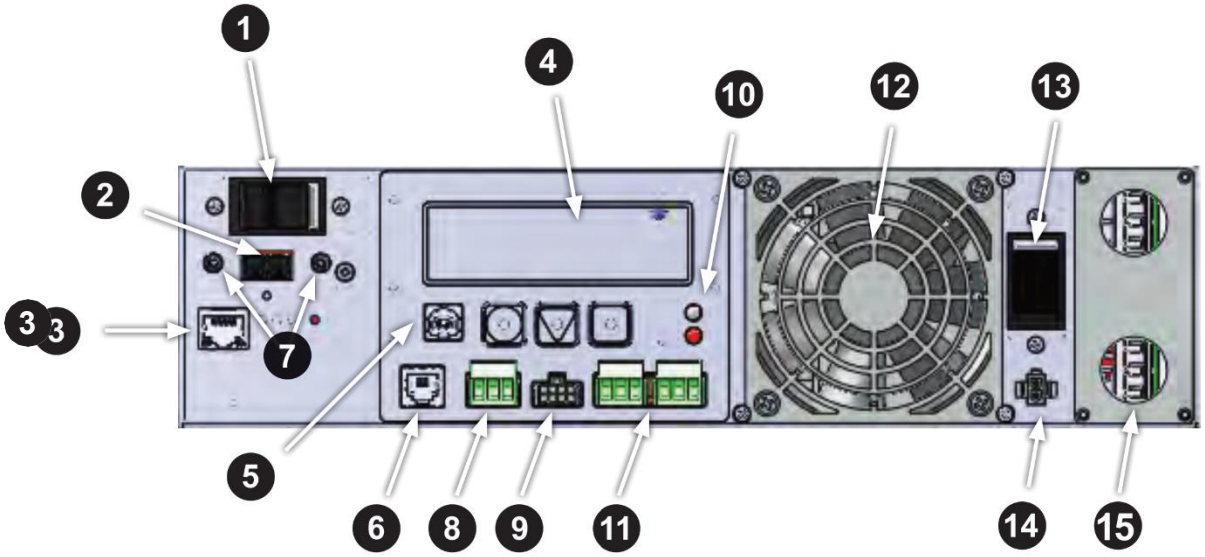

Figure 3 — FXM 350 front panel description

1 **Battery breaker**
This circuit breaker provides over-current protection and is used as an on/off switch for the battery power. It must be switched on for proper Alpha FXM operation.

2 **Battery connector**
The battery connector connects the external batteries to the Alpha FXM.

3 **RJ45 communication module connector**
This RJ-45 connector is the Alpha FXM Ethernet connector.

4 **LCD control panel and menu navigation buttons**
The LCD control panel together with the cancel, scroll and select buttons are used to monitor and control the Alpha FXM350.

5 **USB communication connector**
This USB communication connector provides a direct connection to the USB port of a standard computer USB port (USB 2) for remote monitoring.

6 **Battery temperature sensor connector**
The battery charging voltage is temperature dependant. A battery temperature sensor connects to the Alpha FXM so that the Alpha FXM microprocessor can adjust the charging voltage for optimum charging.

The sensor MUST be attached to the Alpha FXM for normal operation. If the sensor is not attached, a “Temperature Probe Unplugged” alarm appears on the LCD.

Battery voltage test points

7 These test points let you measure the battery voltage. They accept 2 mm diameter test probe tips. The battery circuit breaker must be on to measure the voltage.

The battery voltage test points are not to be used as a power outlet.

Optically isolated user inputs

These optically isolated inputs are used to attach an external switch panel for remote control of the Alpha FXM.

The User Input connector has three contacts (Figure 4) that are used to control the Alpha FXM. The default settings for the user inputs are as follows:

1 (S1): Shorting this contact to Common starts the Alpha FXM battery test. See "Battery Test" on page 87.
2 (S2): Shorting this contact to Common activates an alarm. See "7.3.4.9 Maintenance > User Input" on page 56.
3 (SC): Isolated return for contacts S1, and S2.

8

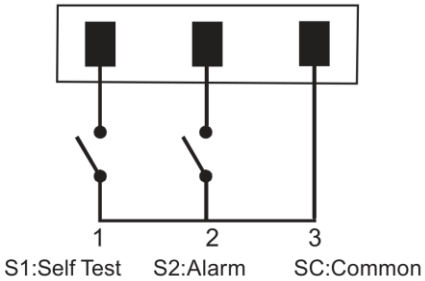

Figure 4 — User input layout

Additional user inputs and dry contacts connector

9 Enables connection to 3 dry contacts and 2 user inputs on the Micro350 top panel or to optional rack mounting ears (see Figure 20).

Status and Alarm LEDs

Status:

10 Green LED solidly illuminated: the Alpha FXM is in Line mode and line power is provided to the load. Green LED flashing: the unit is in Inverter mode and backup battery power is provided to the load.

Alarm:

Red LED solidly illuminated: fault in the Alpha FXM. (See "Table P — Fault Submenu" on page 89.) Red LED flashing indicates an alarm. (See "Table O — Alarm Submenu" on page 88.)

Configurable dry contacts, C1 and C2

Contacts C1 and C2 allow the Alpha FXM to be connected to an external monitoring panel or to traffic control equipment.

The factory default settings can be reprogrammed to meet your requirements. See "7.3.3.3 Monitoring > Relay & Load Shed" on page 47 for web and Alpha UPS Monitor, and "7.5.4 Programming the Dry Contacts" on page 75 for HyperTerminal.

C1: The C1 contact is energized when line power is unqualified and the Alpha FXM provides backup battery power to the load(s). Can be used to generate an “On Battery” alarm.
C2: This contact is energized when the battery drops below a pre-set voltage level. Can be used to generate a “Low Battery” alarm. You can change the pre-programmed level to match the batteries used and the actual operating conditions. See "Adjusting and Controlling the Alpha FXM" on page 74: #35 Low Battery Warning Voltage.

11

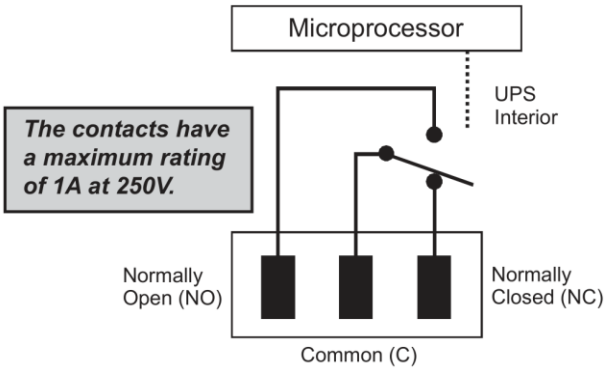

Figure 5 — Contact Layout (Standard for C1 and C2)

Replaceable fan assembly

12 This microprocessor-controlled fan regulates the Alpha FXM internal temperature for optimum performance. Microprocessor-control of the fan speed increases the life of the internal electronics and the fan.
Take care that the fan is not blocked. Failure of the fan generates an alarm; the internal fan assembly is de- signed so it can be replaced if it fails.

AC input circuit breaker

13 This circuit breaker is an on/off switch for the line power into the Alpha FXM, which also provides input protection. It must be switched on for proper Alpha FXM operation.

Battery heater mat connector

14 This connector plugs into a 55W heater mat (optional). The Alpha FXM senses the battery temperature through the battery temperature sensor (explained in 6 above) and controls the battery heater mat. The heater mat is set to turn on at 5°C or less and turns off at 15°C.

AC input/output connections

15 The terminal blocks provide connections to the AC input and loads for dual outputs.

2.4 Micro350 Top Panel

The Micro350 top panel has three additional dry contacts and two user inputs.

The panel also has a door interlock and auxiliary contacts, which can be wired to a user input to generate an alarm when the door is open.

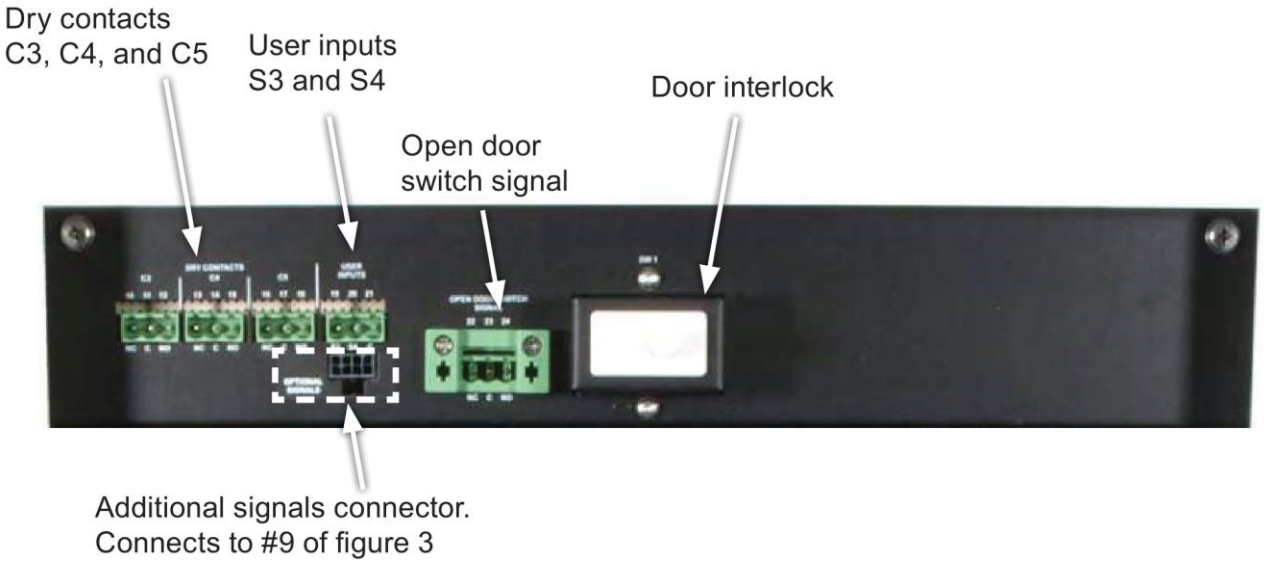

Figure 6 — Micro350 Top Panel

3. Site Planning

WARNING!

Restricted Access: The Alpha FXM350 and Micro350 must be installed in a restricted area accessible only by qualified service personnel.
The Alpha FXM350 and Micro350 are intended for permanent AC connection only. The Alpha FXM350 and Micro350 must be correctly grounded for proper operation.
Older facilities may have inadequate electrical grounding. Inspection must be performed by a qualified electrician before installation to ensure that grounding meets the local electrical code.
The utility line attached to the Alpha FXM input MUST be protected by a circuit breaker certified for this use in accordance with the local electrical code. The UPS must be connected only to a dedicated branch circuit.
The UPS equipment that is powered by this service panel requires the neutral to be permanently bonded to the ground. Always disconnect the batteries before servicing the circuit breaker panel.
The input and output lines to and from the Alpha FXM MUST have disconnect devices attached.

The Alpha FXM is suitable for installations in network telecommunication facilities and locations where the National Electrical Code applies.
Grounding: The Alpha FXM is suitable both for installation as part of a common bonding network (CBN) and an isolated bonding network.
For installations above 1400 m (4500 ft) elevation, additional cooling may be needed to reduce the operating temperature of the Alpha FXM. The maximum allowable operating temperature must be reduced by 2°C (3.5 °F) for every 300 m (1000 ft) above 1400 m (4500 ft).

3.1 Safety Precautions

- Install the Alpha FXM350 and Micro350 and batteries on a surface that can support the total weight. See Chapter "10. Specifications" on page 90.
- The input wiring must reach a suitably grounded power outlet and the load wiring must reach the Alpha FXM350 and Micro350 output terminal blocks.
- Place the Alpha FXM350 in a properly sheltered location or inside a weather-proof enclosure to protect the electronics from water, dust and other possible contamination.
- Backup Generator (If used)
  In Generator mode, the Alpha FXM range of acceptable input frequency and voltage is expanded to accept the fluctuations created by a generator. See "7.2.2 The LCD Control Menu" on page 40, Table B, **Sense Type.** Use a generator with electronic speed and voltage controls which produces less than 10% voltage total harmonic distortion (THD). Mechanical governors can force the Alpha FXM to run continuously in Battery mode. Before installation, make sure the generator's output voltage is compatible with the Alpha FXM input voltage requirements. To make sure the system runs smoothly, use a generator that supplies twice as much power as drawn by the total load.

3.2 Electromagnetic Compatibility (EMC) Requirements

Observe the following EMC requirements when setting up the Alpha FXM and its internal equipment:

- All AC mains and external supply conductors must be enclosed in a metal conduit or raceway when specified by local, national, and/or other applicable government codes and regulations.
- The customer facilities must provide suitable surge protection.
- To meet FCC Class B requirements, follow the instructions in section 5.1.4 to attach a ferrite ring to the connector end of your RJ45 network cable.

3.3 Mounting Options for the Micro350 (XL and XL3)

Figure 7 shows the mounting hardware for the various configurations of the Micro350. Choose from the following options for mounting the Micro350:

- Mounting to a wooden pole, 5.1.1.1 on page 21.
- Mounting to a steel or concrete pole, 5.1.1.3 on page 22.
- Mounting to a wall, 5.1.1.4 on page 23. Optional pedestal mounting is shown in Figure 8.

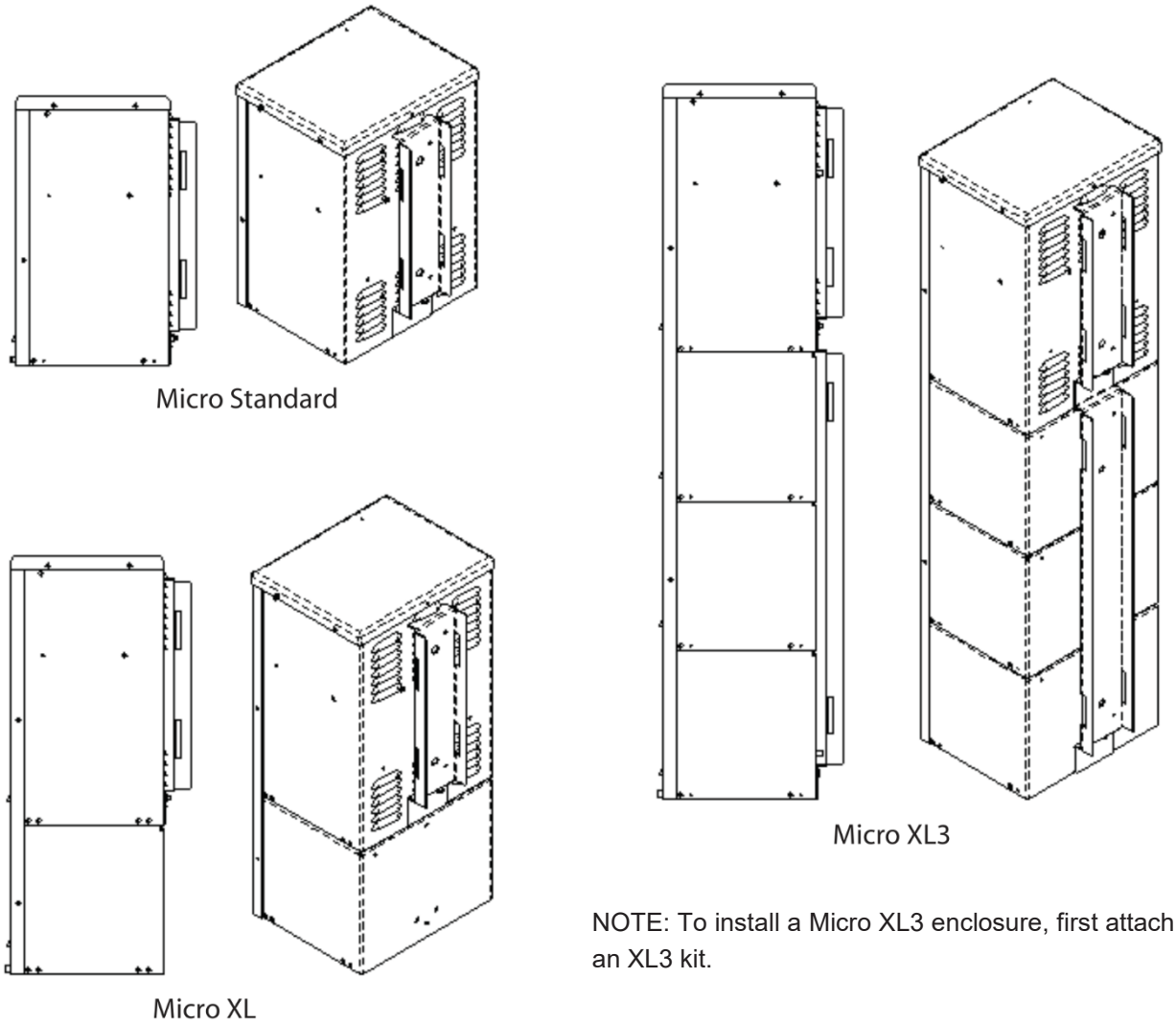

NOTE: To install a Micro XL3 enclosure, first attach the XL to an XL3 kit.

Figure 7 — Mounting the Micro350

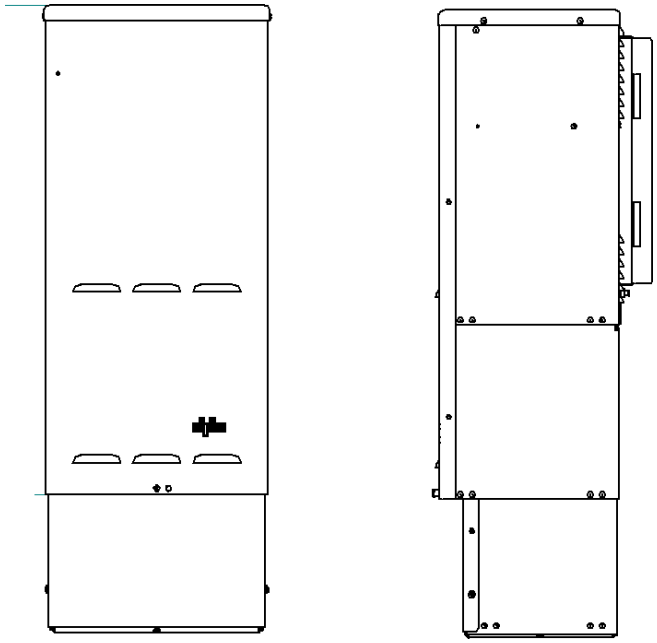

Figure 8 — Mounting on optional pedestal

3.3.1 Battery Heater Mats

The FXM350 and Micro350 allow connection, on its front panel, of a battery heater mat without a thermostat (#14 in Figure 3). Maximum power of the battery heater mat for use with the FXM350 connector is 55W. The FXM turns the heater mat on when the temperature measured by the battery temperature sensor senses a temperature < 5°C. It turns the heater mat off when the temperature raises to >15°C. For the Micro350XL or bigger systems needing more than one heater mat, it is recommended to use the heater mats with built in thermostat and daughter heater mats that can be daisy chained. These heater mats may be wired to the AC in the terminal block on the distribution panel. Ensure that the input breaker is appropriately rated.

3.3.2 Mounting options for the FXM350

Figure 9 and Figure 11 provide dimensions for mounting the FXM350 UPS as a standalone device.

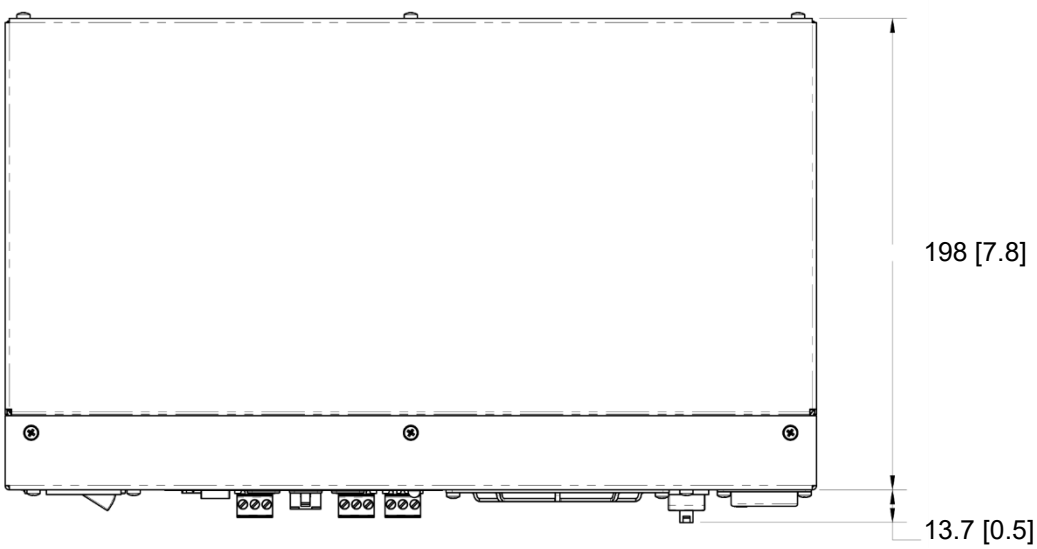

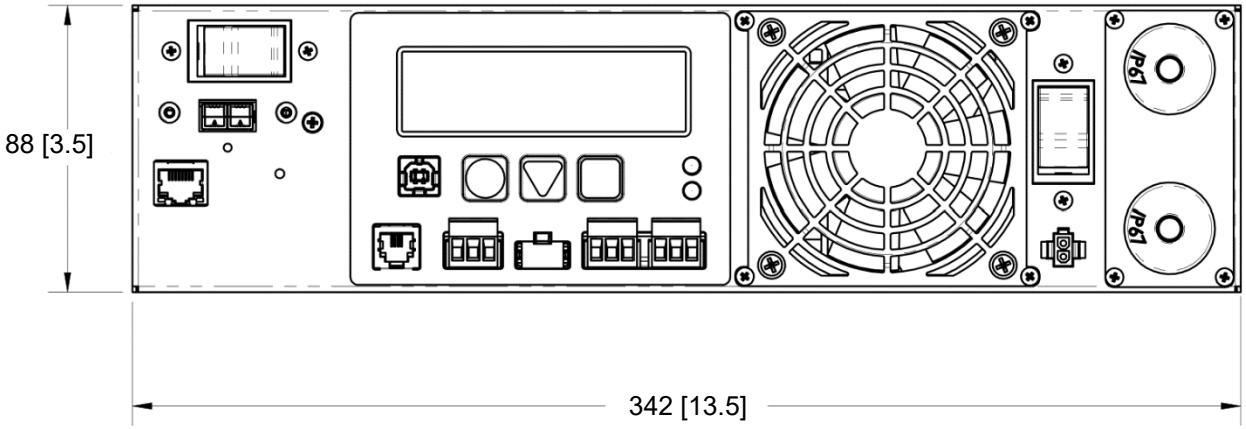

Figure 9 — FXM350 Mounting Dimensions

3.3.2.1 Standalone Configurations:

- Wall mounted, with front access, onto a 19" mounting tray that includes a battery cabinet
- Rack mounted in a 19" or 23" rack with add-on ears and a wiring box (Figure 10). An optional signals assembly can be ordered, which provides two user inputs and three dry contacts.

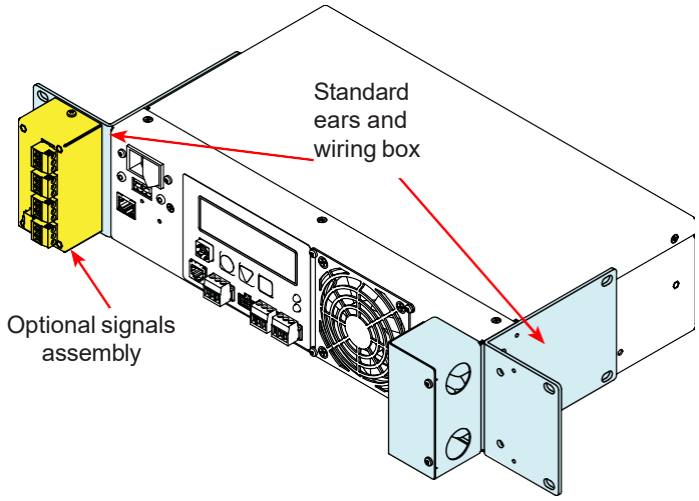

Figure 10 — Rack-mount options

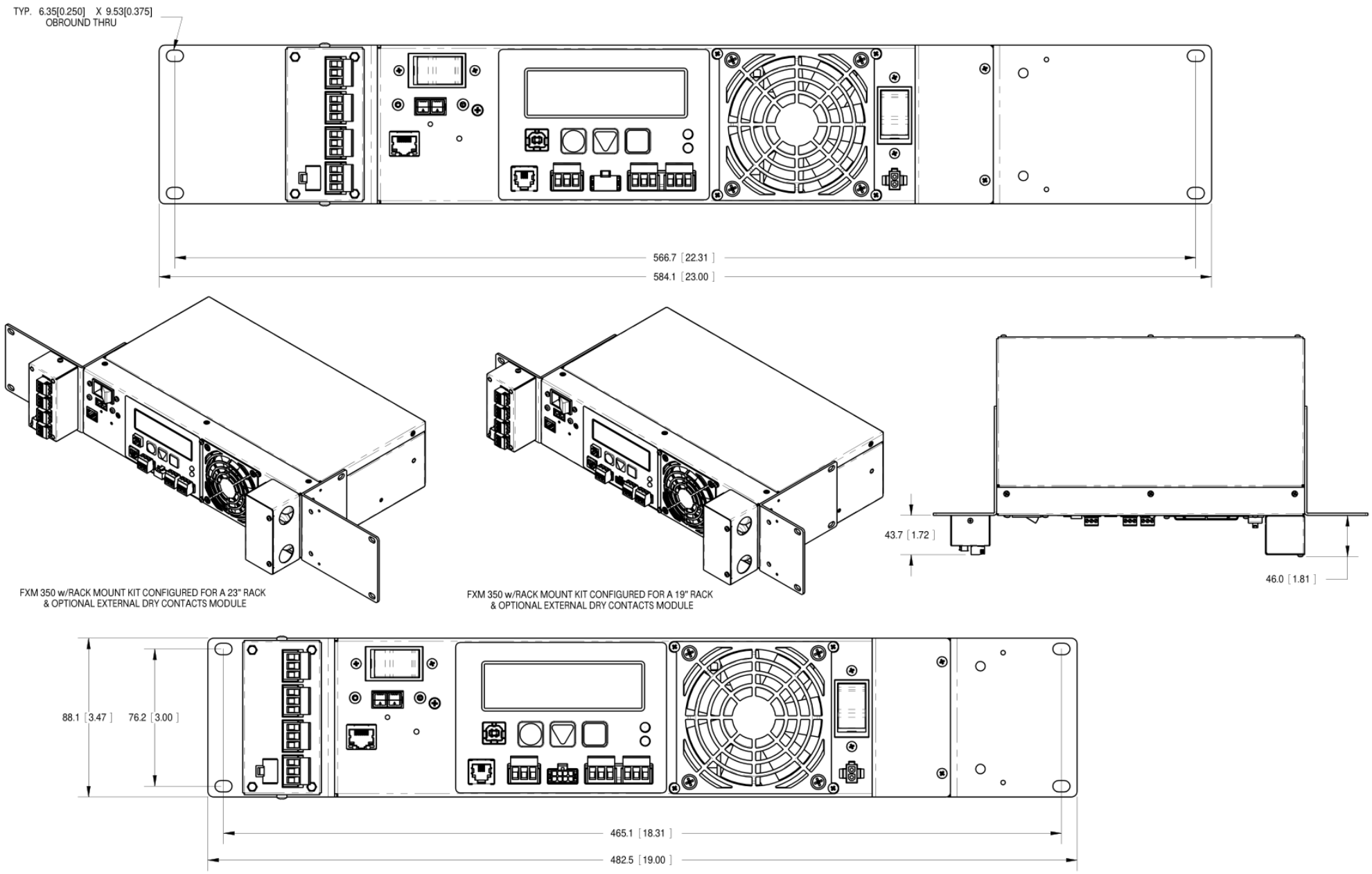

Figure 11 — FXM350 with ears for rack mounting

3.4 Options for Communicating with the FXM

There are several ways to communicate with the Alpha FXM UPS:

1. The control panel page 37).
2. Window®'s HyperTerminal or other terminal emulation program to access the UPS command line system over the USB interface (page 69).
3. AOE UPS Monitor installed on your computer and connected to the FXM over the USB interface. The AOE UPS Monitor software can be downloaded from www.alpha.ca./downloads/.
4. Factory-installed FXM communication module to communicate with the Alpha FXM using any of the following:
   - On site PC
   - Company intranet or the internet using a web browser (page 44).
   - SNMP communications

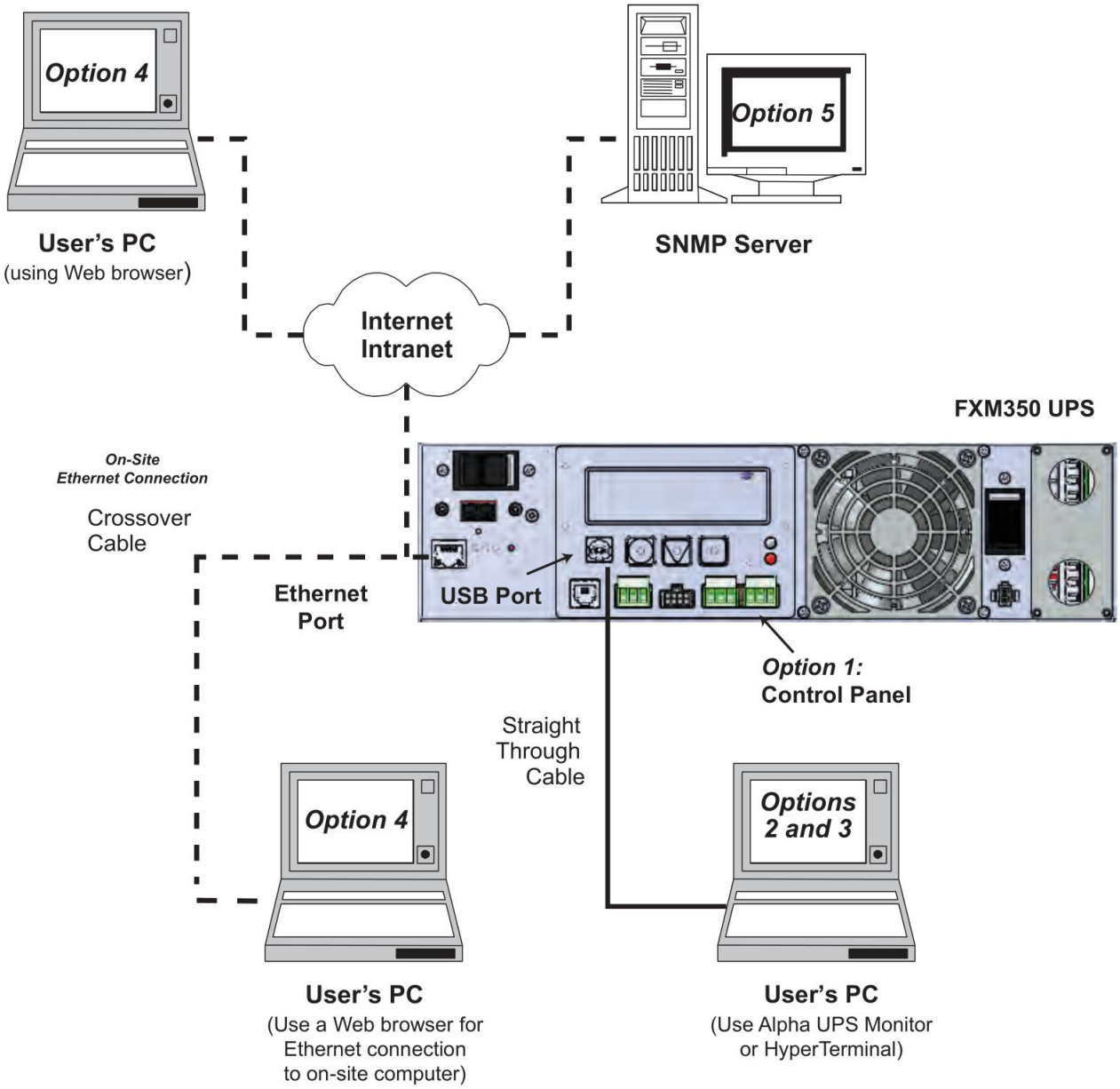

Figure 12 — Alpha FXM Communication Options

4. Unpacking the Equipment

4.1 Alpha FXM350/Micro350 Configuration

The Alpha FXM is factory installed inside the Micro350 prior to shipping.

WARNING!

The Alpha FXM350/Micro350 combination is heavy, up to 12 kg (26 lb). Use proper lifting techniques.

4.2 Unpacking

1. Select a suitable area for unpacking.
2. Store all the packing material and boxes for possible equipment returns.

4.2.1 FXM350 Standalone or Micro350 (XL)

1. Check the contents in your product package. The following standard items are shipped together in a plastic bag:
   - Terminal blocks and labels for the dry contacts
   - Temperature sensor cable
   - Battery clip with screws
   - AC plate with screws and bushing
   - Ferrite ring
   - Cable tie
   - Operator's manual
   - USB cable
2. Compare the packing slip and the list of parts with the items you received. If the list of parts on your packing slip does not match the items you received, or any items appear damaged, immediately notify your carrier agent and the supplier who prepared your shipment.

4.3 Optional Items

Optional items may include:

- Battery heating mats
- Battery cable kit
- Rack mount ears and wiring box kit for mounting in a 19" or 23" rack (Figure 10)
- Optional signals assembly for FXM350 (Figure 20)
- Distribution panel

Batteries, if ordered from AOE, will ship separately.

5. Installation

WARNING!

To avoid personal injury or damage to the equipment, always use at least two installation personnel to remove the unit from its container.

5.1 Installation of the Micro350

WARNING!

Batteries or other components (with the exception of factory-installed components) must not be installed until the Micro350 cabinet has been securely set in place at its permanent location. Transporting the unit with batteries installed may cause a short circuit, fire, explosion, and/or damage to the battery pack, enclosure and installed equipment.
Damage caused by improper shipping or transporting a unit with batteries installed is not covered by the warranty.

5.1.1 Mounting the Micro350 Enclosure

5.1.1.1 Mounting to a wooden pole

Have the following tools and materials on hand:

- 13 mm nut driver for the bolts that attach the cabinet to the mounting bracket.
- Two 5/8-inch diameter machine bolts (UNC tread); SAE (Grade 5 or better), length to suit the pole (not provided).
- Two 5/8-inch diameter zinc-plated flat washers.
- Two 5/8-inch diameter hex nuts (UNC thread).
- Auger or drill for boring 3/4-inch diameter holes in the wood pole.

5.1.1.2 Procedure:

1. Using the mounting bracket as a template, drill 2 holes into the pole to accept the machine bolts.
2. Secure the mounting bracket to the pole with the machine bolts as shown in Figure 13.
3. Secure the Micro350 cabinet to the mounting bracket with the supplied bolts (Figure 14).

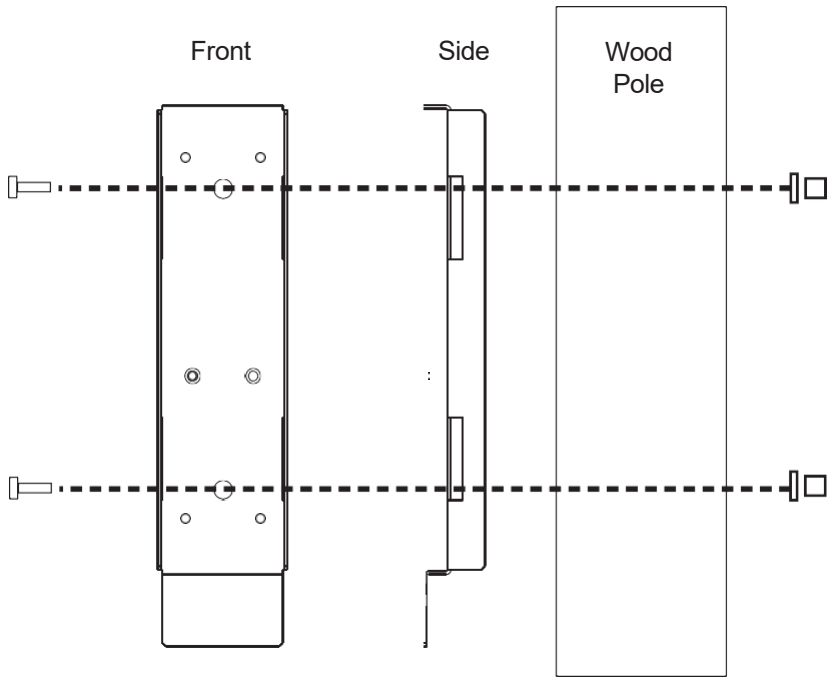

Figure 13 — Mounting to a wooden pole

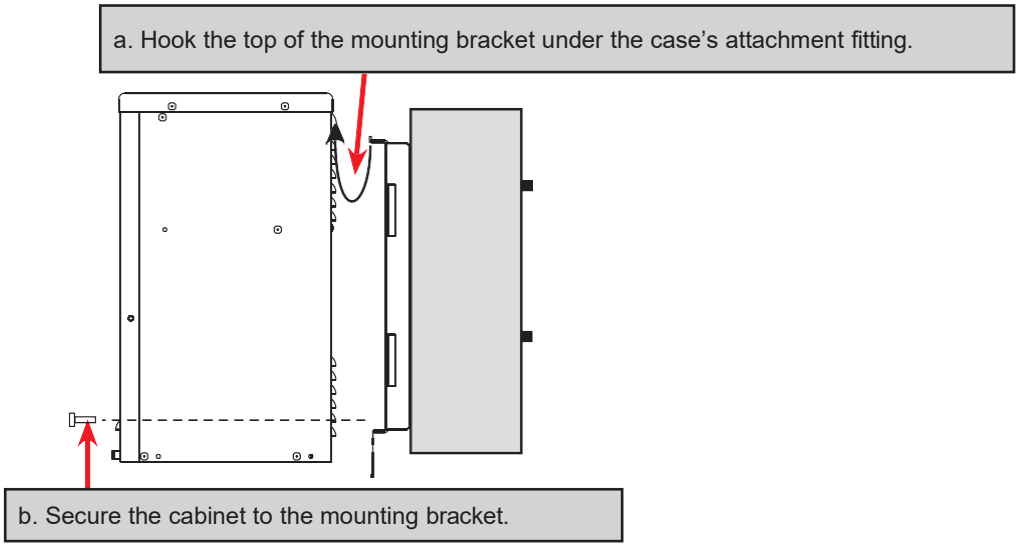

Figure 14 — Securing the enclosure to the mounting bracket

5.1.1.3 Mounting to a Steel or Concrete Pole

Have the following tools and materials on hand:

- 13 mm nut driver for the bolts that attach the cabinet to the mounting bracket.
- Two pole mount straps that fit the pole. Straps must be stainless or galvanized.
- C001 Band-It tool or equivalent.
- C206 3/4-inch stainless steel Band-It band or equivalent.
- C256 3/4 inch stainless steel Band-It buckles or equivalent.

Procedure:

1. Secure the mounting bracket to the pole with the straps.

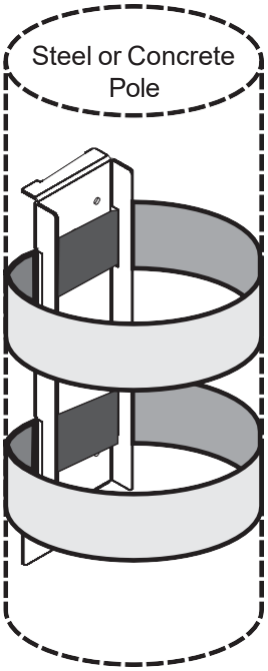

2. Secure the Micro350 cabinet to the mounting bracket with the supplied bolts.

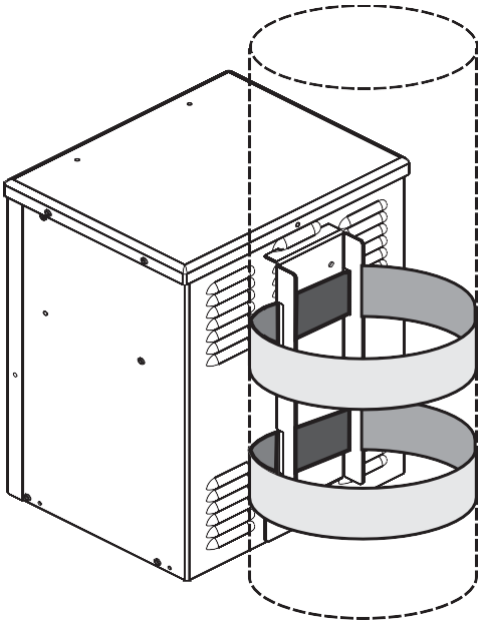

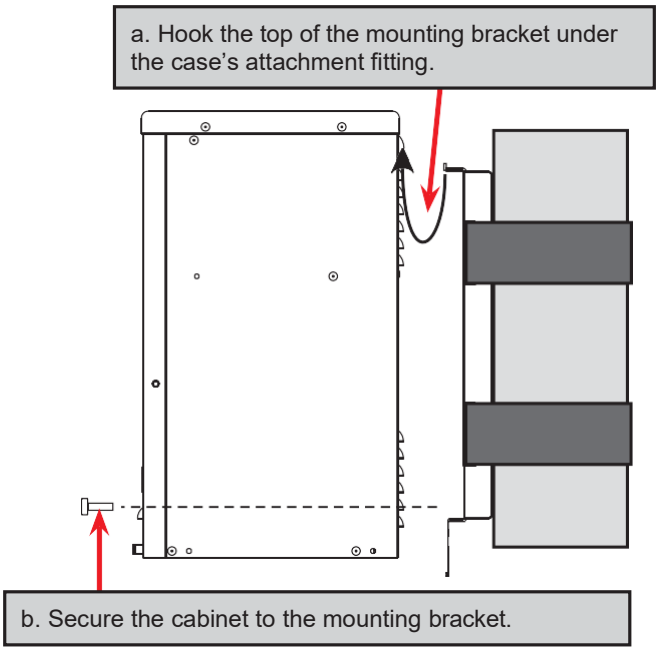

5.1.1.4 Mounting to a Wall

Have the following tools and materials on hand:

- 13 mm nut driver for the bolts that attach the cabinet to the mounting bracket.
- Four 1/4" x 1-1/8" lag bolts.
- Four 1/4" diameter flat washers.
- Drill with 1/8" bit for drilling pilot holes.
- Assorted sockets and wrenches.

Procedure:

NOTE:

If the wall structure is not strong enough to support the weight of the Micro350 enclosure and batteries, use a wooden backing plate that has a minimum thickness of 1-1/4" and a maximum width of 4" that is securely mounted to a wall stud or studs.

1. Using the mounting bracket as a template, drill 4 pilot holes (indicated by the arrows in the following diagram) into the wall to accept 1/4" bolts.
2. Secure the mounting bracket to the wall with the 4 bolts and washers.
3. Secure the Micro350 enclosure to the mounting bracket with the supplied bolts.

NOTE:
To install a Micro XL3 enclosure, first attach the XL to an XL3 kit.

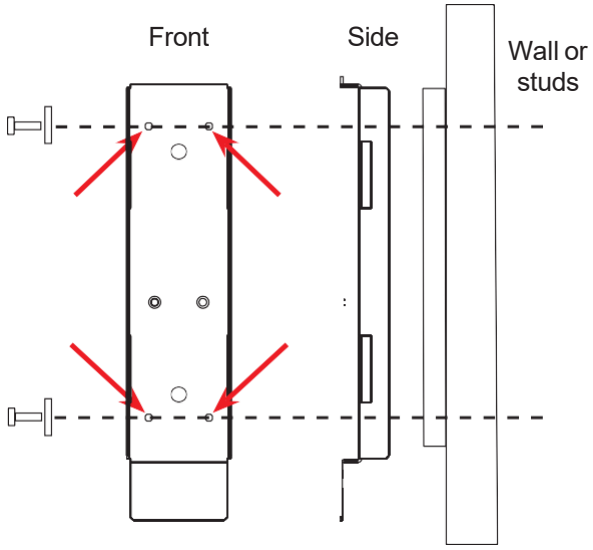

Figure 15 — Attaching the mounting bracket to the wall studs

5.1.2 Wiring the Micro350

WARNING!

Before starting, disconnect the Line power.
If stranded wires are used for connection at the input terminal block, ferrules or equivalent crimping terminals must be used.
Separate the AC input power cables from the output power cables within the Alpha FXM enclosure. Route them through separate conduit openings in the enclosure.
Separate the DC Battery cable from the AC Input and Output power cables. Route the cable through its own opening.

The AC power distribution terminal blocks in the Micro350 enclosure are located in the below the FXM350 (see Figure 16). Refer to Table S for detailed electrical specifications.

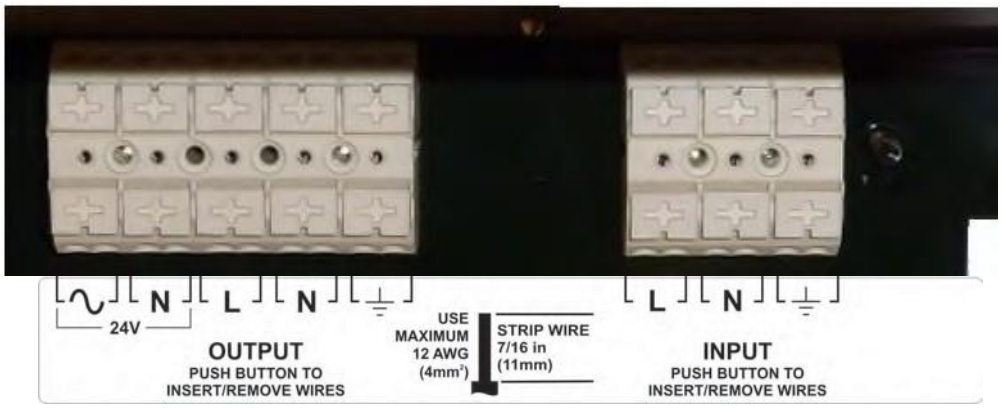

Figure 16 — AC Power distribution terminal blocks

Have the following tools and materials on hand:

- Hammer for removing the knockouts
- Slot head screwdriver, 3/16 or smaller, to attach wires to the terminal blocks for the dry contacts / user inputs on the front panel
- Slot head screwdriver, 1/4 or larger, for removing the knockouts
- DC voltmeter
- Battery terminal corrosion inhibitor such as NOCO Company's NCP-2 or Sanchem Inc. No-Ox ID Grease "A"
- Maximum of 12 AWG wire for wiring the input and output terminal blocks
- If used, 1/2" conduit connectors to fit the knockouts (7/8" diameter) and armored conduit to fit
- Optional battery heater mats

5.1.2.1 Procedure

1. Remove the front cover of the enclosure – lift the cover up and then pull out at the bottom.
2. If necessary, remove the knockouts with a hammer and screwdriver.
3. If used, install conduits into the openings.
4. Install the wires into the cabinet. Make sure that the wiring is long enough to reach the terminal blocks.
5. Strip the ends of the wires by 7/16" (11 mm).
6. Run the ground wire to the ground terminal shown in Figure 17.
7. Push in the button on the terminal block and then insert each wire into the corresponding terminal. See Figure 18.
8. Secure the wiring to the wiring management panel with tie-wraps provided with the Micro350.
9. Remove the packaging around the door switch after completing the wiring.

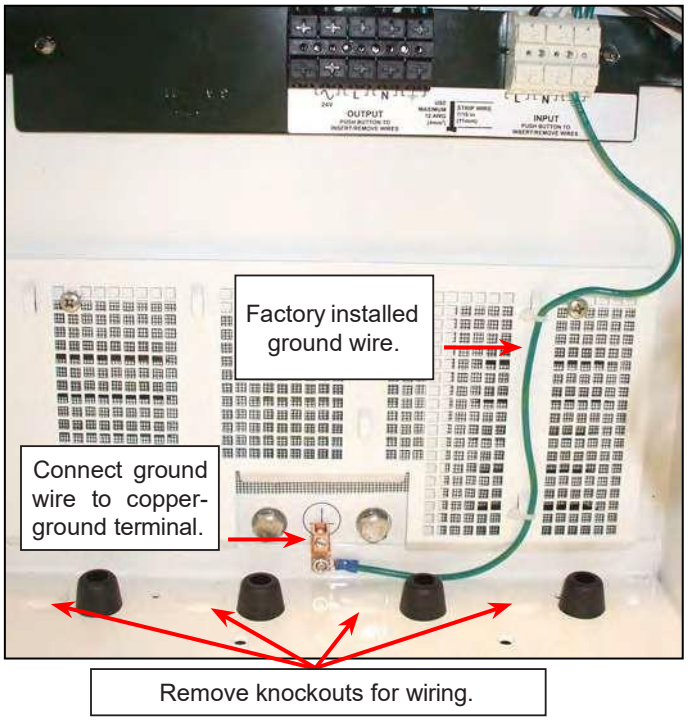

Figure 17 — Wiring the Micro350

WARNING!

The input and output wiring must NOT touch the cabinet except for the wiring management panel.
The input terminal block has two inputs for each pole (line, neutral and ground). Make sure you have inserted each wire into the correct position and not accidentally connect- ed the line and neutral to the same pole.
Verify the line wire is attached to the line terminal block, the ground wire is attached to the ground terminal block and the neutral wire is attached to the neutral terminal block to prevent accidental shocks or electrocutions.

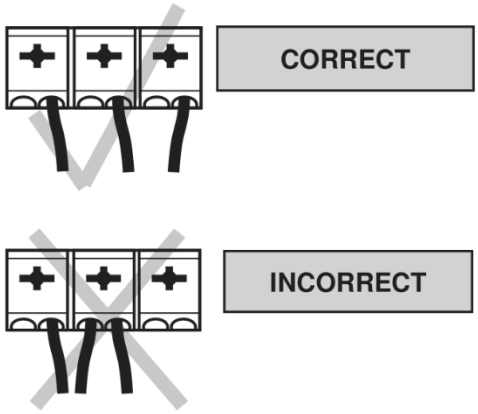

Figure 18 — Terminal block wiring

5.1.3 Options

If applicable, connect the following—see Figure 3 on page 11.

- USB cable
- Dry contact alarms
- User inputs

5.1.4 Ferrite Ring for Network Cable

Remove the ferrite ring and cable tie from the plastic bag of small parts that were part of your shipment. Attach the ferrite ring to the connector end of your RJ45 network cable as shown in Figure 19.

Figure 19 — Ferrite ring installed on RJ45 network cable

5.1.5 Battery Heater Mats

For installation and connection of option battery heater mats, refer to section "5.3 Wiring the External Batteries and Optional Battery Heater Mats" on page 29.

5.2 Mounting and wiring the FXM350 as a standalone device

5.2.1 Mounting

The FXM 350 UPS module, which is approximately 13.5 in wide, can be mounted in several ways:

- Wall mounted, with front access onto a 19" mounting tray that includes a battery cabinet
- 19" or 23" rack mounted (with the addition of the optional ears shown in Figure 20). The signal assembly option provides additional user inputs and dry contacts.

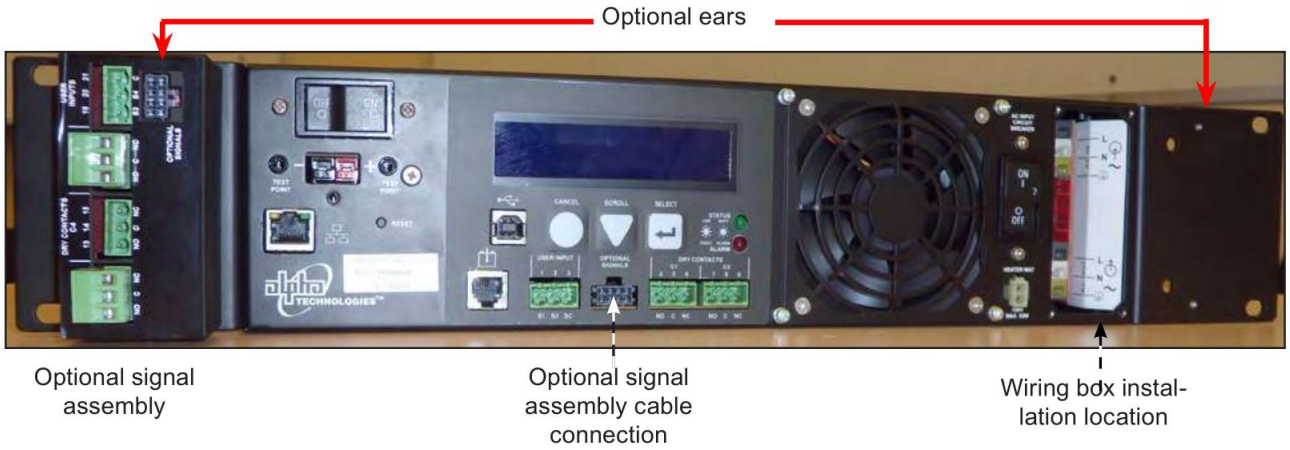

Figure 20 — FXM350 with rack-mount ears and signal assembly option (wiring box not shown)

5.2.1.1 Rack Mounting the FXM

STEP 1: Install Ears

1. Install the ears at both ends of the FXM.
2. Mount the FXM in the rack.

STEP 2: Install Wiring Box

1. Remove the AC I/O connections cover. Keep the screws to attach the wiring box.
2. Thread the wires through the wiring box.
3. Attach the wiring box with the four screws removed in the first step.
4. Complete the wiring as described in section 5.2.2.
5. Screw the cover onto the wiring box.

STEP 3: Install Signal Assembly Option

1. Attach the signal assembly to the left ear.
2. Connect the signals connector cable from the signal assembly to the FXM Figure 20.

AC I/O connections cover

Wiring box

5.2.2 Wiring the AC Input and Output

WARNING!

Make sure the line power is off and tagged. Switch off all input and output circuit breakers on the FXM350 before making any electrical connections.

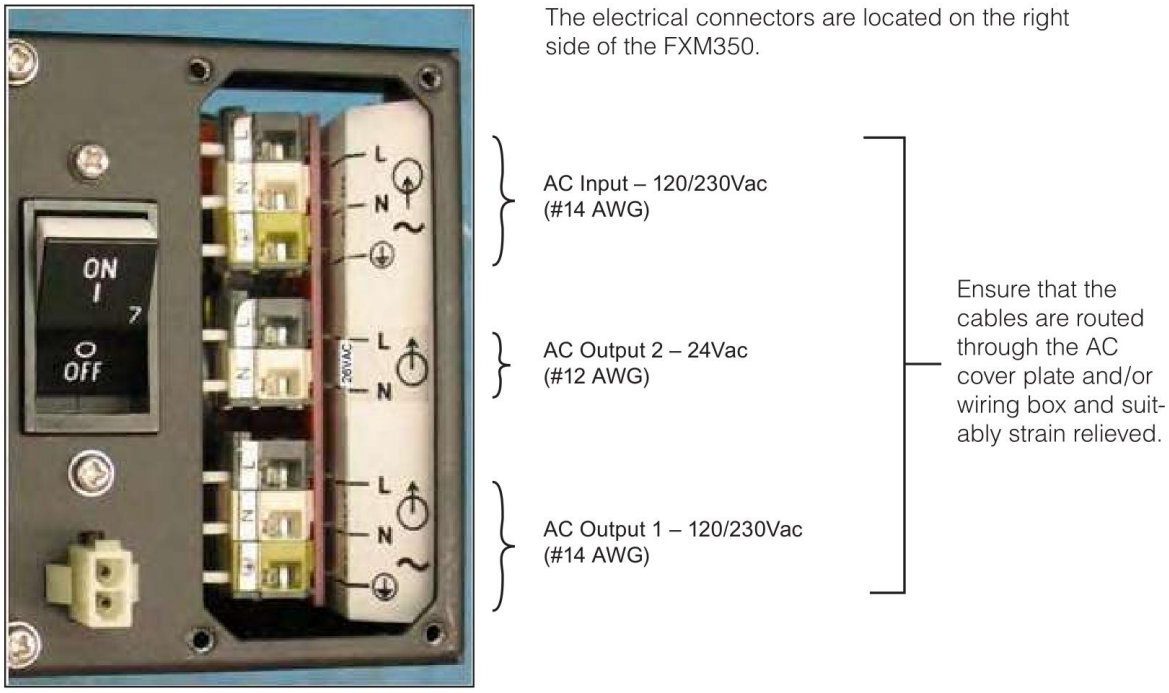

Figure 21 — FXM350 Electrical Connections

5.2.3 Ferrite Ring for Network Cable

Remove the ferrite ring and cable tie from the plastic bag of small parts that were part of your shipment. Attach the ferrite ring to the connector end of your RJ45 network cable as shown.

5.3 Wiring the External Batteries and Optional Battery Heater Mats

WARNING!

The batteries must be installed by qualified personnel trained in the safe use of high- energy power supplies and their batteries. Refer to the safety section in this manual.

- Use new batteries when installing a new unit. Verify that all batteries are the same type with identical date codes.
- Use appropriate battery voltage string for 24 and 48V versions of the products.
- If you are making your own battery wiring harness, use at least 10 AWG wires.
- The battery return connection is to be treated as an Isolated DC return (DC-I) as defined in GR-1089- CORE.

5.3.1 Procedure

1. Place the battery heat mat(s) on the battery shelves. Refer to the manual that ships with the battery heat mat to connect it to a power source.
2. For FXM350-48 (48V battery string), number the batteries from 1 to 4 with labels or tape. For FXM350-24 (24V battery string), number the batteries from 1 to 2 as shown in the Figure 22.
3. Coat the battery terminals with the corrosion inhibitor.

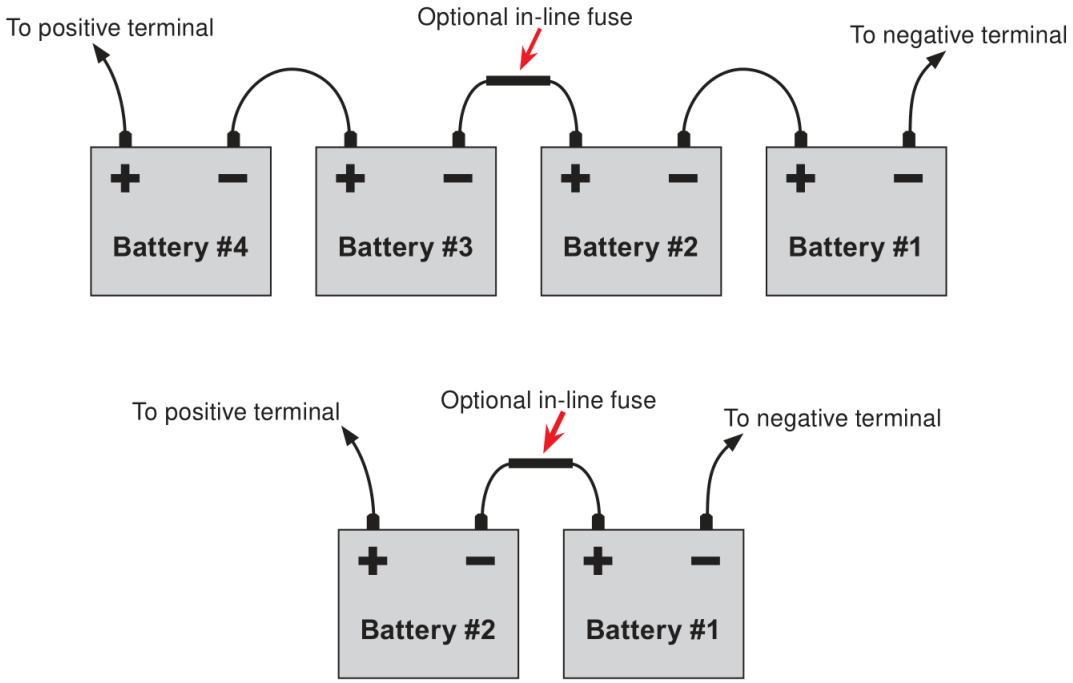

Figure 22 — External Battery Wiring (for 48 VDC string (top) and 24 VDC string)

CAUTION

Torque the battery terminals according to the manufacturer's specifications as given on the name plate or data sheet.

4. Place the batteries into the enclosure. Orient them so that connecting cable lengths are minimized.
5. If the optional battery restraining bar is used, install it as shown in Figure 23.
6. Connect the batteries as shown in Figure 22. If used, install the in-line fuse.
7. If the Micro XL or XL3 is used, connect and install the extra shelves of batteries.
8. Connect the black battery cable to the negative terminal of the battery string, and the red battery cable to the positive terminal of the battery string.
9. When the batteries are wired, measure the voltage at the battery connection terminals. It should read 21- 27V for a 24V battery string and 42-54 for a 48V battery string.
10. Note the polarity and ensure it is correct.
11. Ensure that the DC breaker if OFF.
12. Connect the battery connectors to the FXM350 and install the battery clip.

CAUTION

Failure to install the battery clip could result in overheating of the battery connectors and possible damage to the FXM350.

13. Route the sensor end of the battery temperature cable to the batteries.
14. Attach the battery temperature sensor to the body of the battery, about 2 to 3" (5 to 7.5 cm) from the base of the battery.

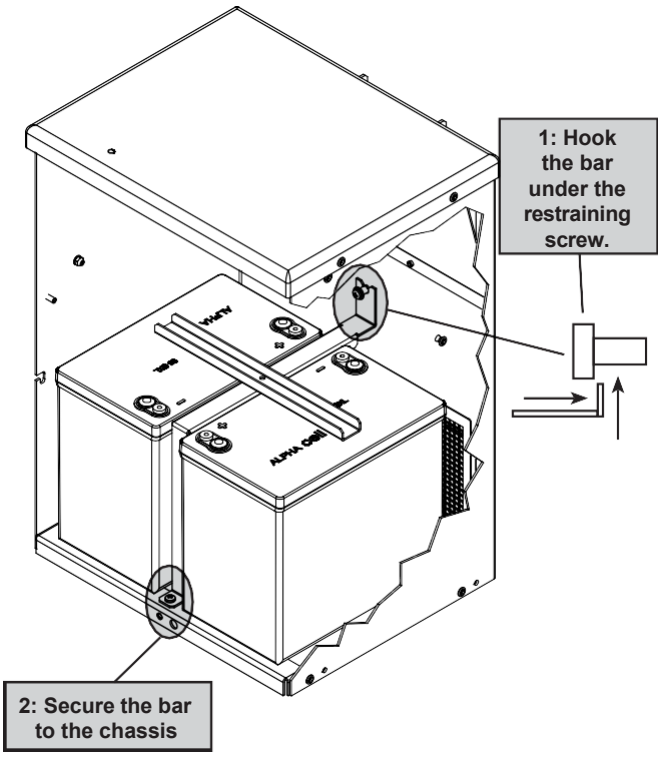

Figure 23 — Securing the batteries with the optional restraining bar

5.4 Start-Up

1. Switch on the FXM battery circuit breaker. The LCD displays **STANDBY**.
2. Switch on the AC utility breaker at the main power panel. Switch on the AC Input circuit breaker on the FXM. If qualified, **LINE** appears on the LCD.
3. Allow the batteries to charge for approximately 8 hours.
4. The load should be receiving power, if not, perform troubleshooting.

6. Theory of Operation

6.1 Block Diagram

Figure 24 shows the eight PCBs in the FXM350 and the communication path between them.

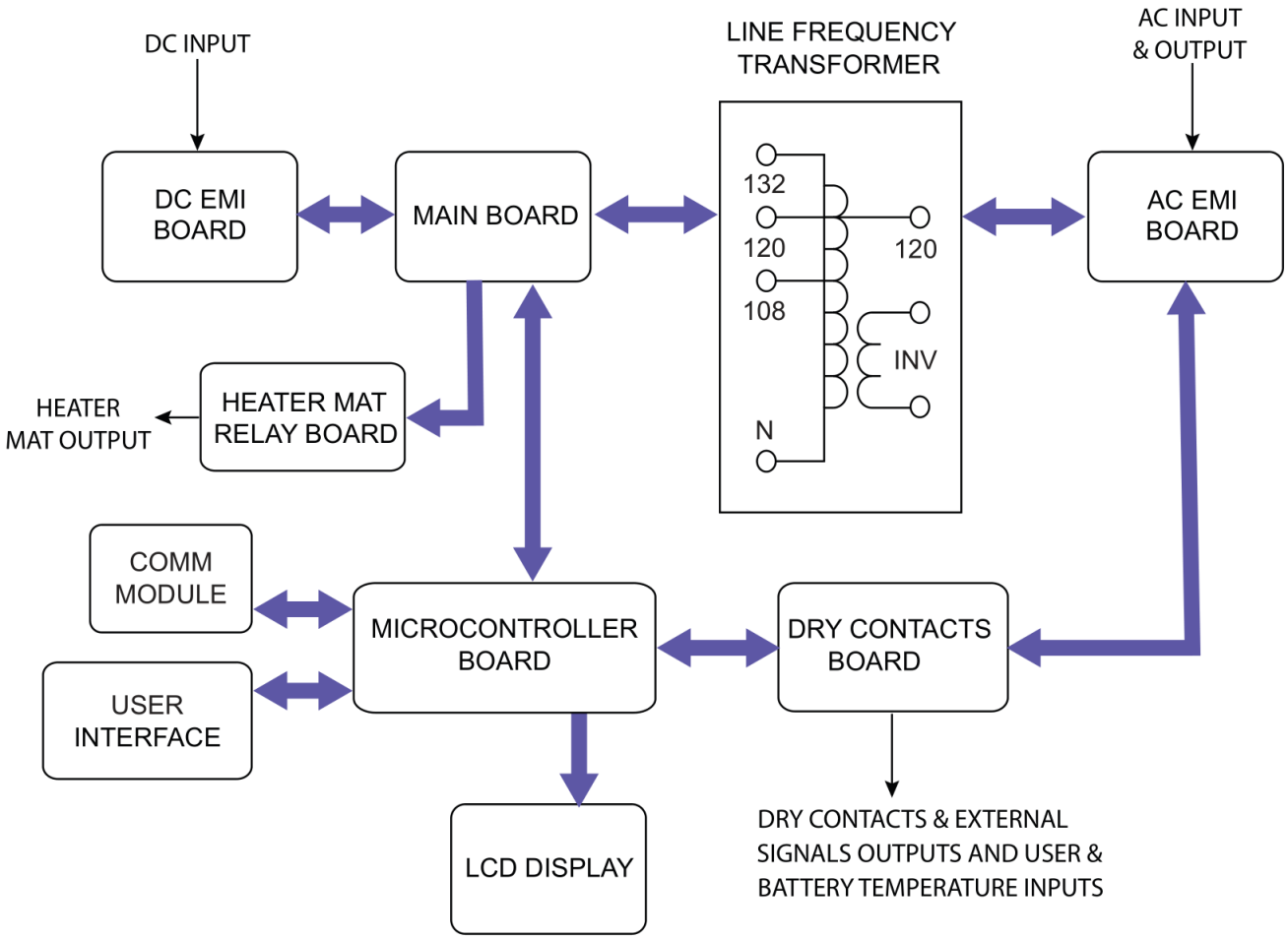

Figure 24 — FXM 350 block diagram

6.2 Modes of Operation

The following list of operation modes is explained in the following sections.

- Line mode
- Backup mode
- Standby
- Shutdown
- Fault

6.2.1 Line Mode

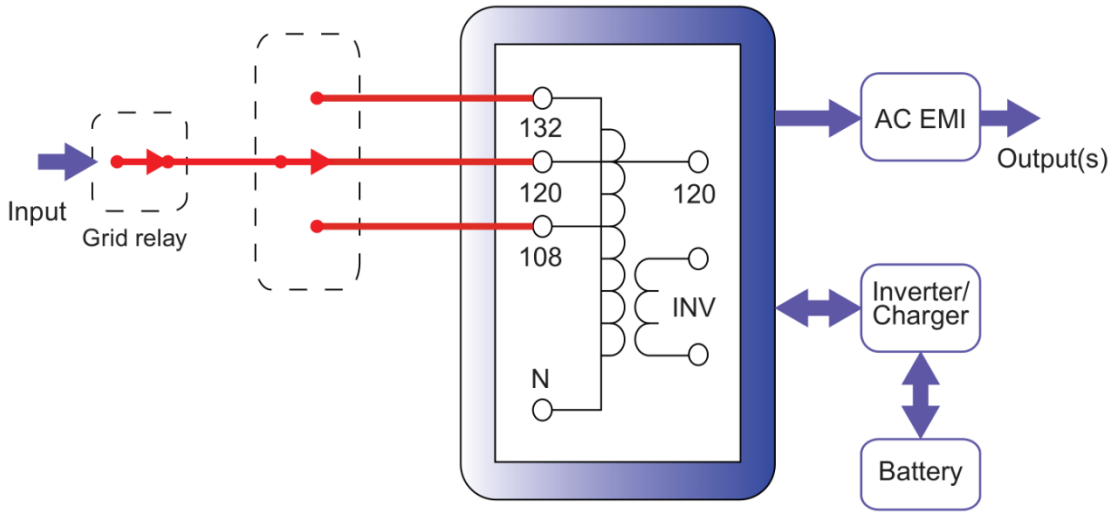

In line mode, the voltage input equals the voltage output. The FXM350 has Automatic Voltage Regulation (AVR) to maintain the output voltage within the regulation range.

6.2.1.1 Boost Mode

When the input voltage drops, a reduction in output voltage is prevented by increasing the ratio of primary to secondary windings in the transformer. The ratio is increased by using a relay to change the transformer taps.

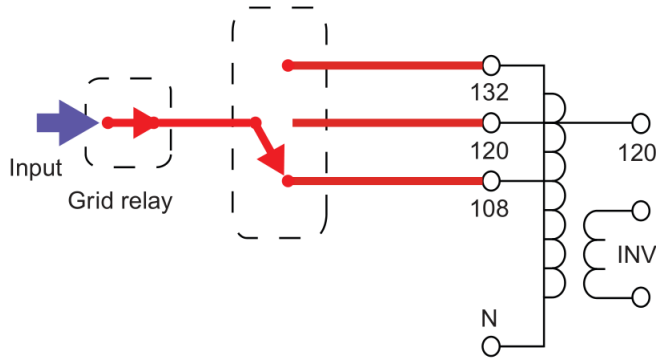

6.2.1.2 Buck Mode

When the input voltage increases, an increase in output voltage is prevented by decreasing the ratio of primary to secondary windings in the transformer. The ratio is decreased by using a relay to change the transformer taps.

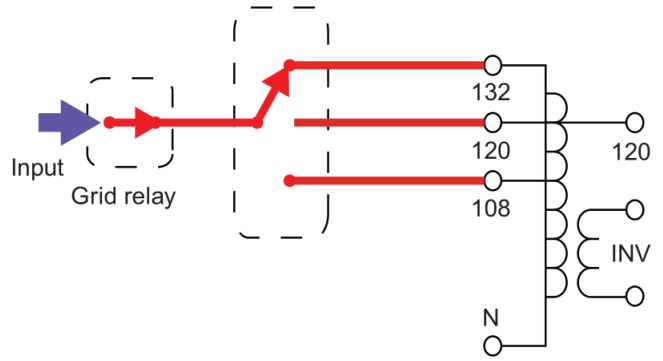

6.2.1.3 Battery Charging in Line Mode

The battery charging path is shown in Figure 25.

- Charging current of 4A for 48V battery
- Charging current of 6A for 24V battery
- No de-rating of load on AC outputs

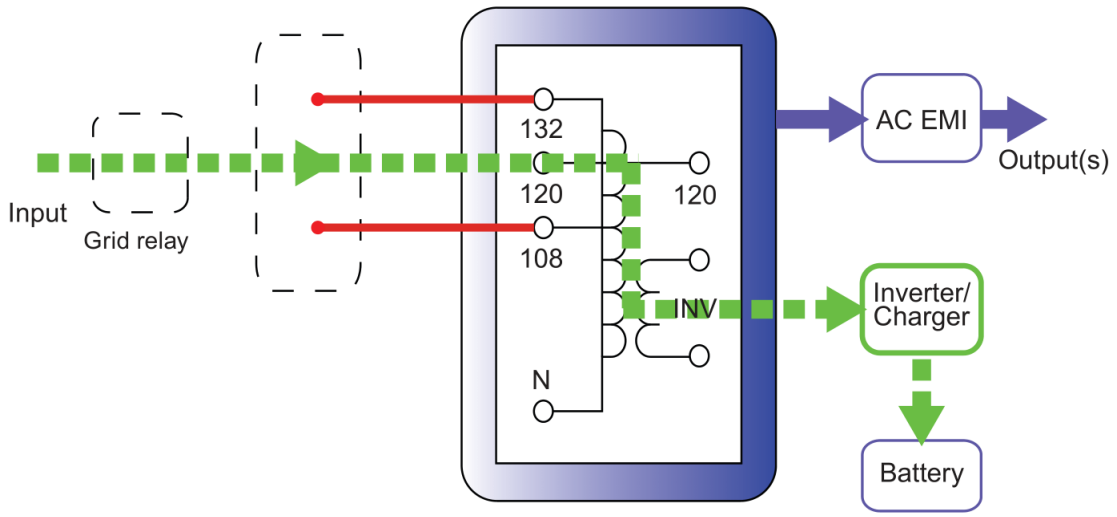

Figure 25 — Battery charging in line mode

6.2.2 Back Up (Inverter) Mode

The FXM350 provides back up power from the batteries if utility power fails. The grid relay opens to prevent power feedback to the grid.

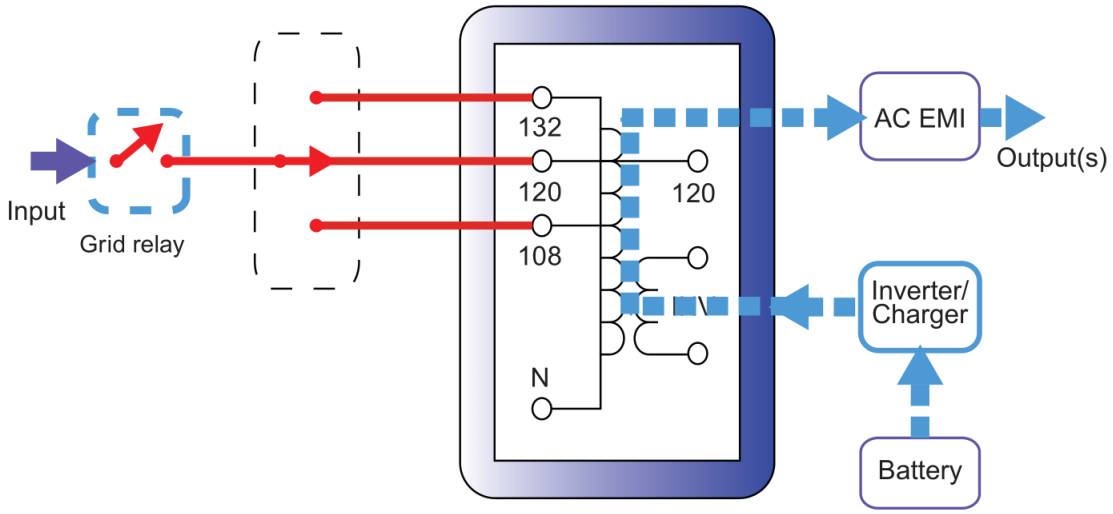

Figure 26 — Back up power from batteries

6.2.3 Standby Mode

The FXM350 displays **STANDBY** when the DC breaker is closed (unit is ON), but no AC is present. When the AC input circuit breaker is switched on and line power is qualified, the Alpha FXM switches to **LINE** mode. If AC is within specifications, the FXM provides automatic voltage regulation (AVR).

6.2.4 Shutdown Mode

The FXM/Micro350 can be shut down by switching off the AC breaker and the DC breaker.
The unit can also be shut down from the front panel LCD or remotely through the USB and SNMP.
If the Shutdown command is applied in Back Up mode, the unit shuts the inverter and opens the grid relay (Figure 26).
If in Line mode, the grid relay is opened and the inverter disabled.
The FXM350 can be removed from Shutdown mode by manually resetting the AC and DC breakers or from the LCD or the web pages.

6.2.5 Fault Mode

If a fault occurs on the FXM (red LED solidly illuminated), the unit goes into Shutdown mode until the fault is cleared and reset. See Table P for a list of faults and to clear the fault, see Figure 28.

7. Operating the FXM350

7.1 Switching the Alpha FXM on and Off

Under normal operation, the Alpha FXM is always powered ON to supply uninterruptible power to the load. Switching off the Alpha FXM will disconnect the power supply to the load. If for any reason you need to switch off the Alpha FXM while maintaining power to your critical load, make sure that you have a plan that provides an alternate source of power.

7.1.1 Switch Off Procedure

1. Switch off the AC input circuit breaker.
2. Switch off the battery circuit breaker.

The status LED turns off and the LCD panel goes blank. The Alpha FXM is now switched off and no backup power is supplied to the load.

7.1.2 Switch On Procedure (LINE mode)

Before you put the Alpha FXM back into commission, make sure that the line is qualified and the batteries are fully charged.

1. Switch on the battery circuit breaker. The LCD displays **STANDBY** and the fan turns on for about a minute. If the temperature is below –15ºC, the LCD display may not function. See Chapter 9.
2. Switch on the AC input circuit breaker. The Alpha FXM qualifies the line power. The LCD displays **RETRAN**, then shows **LINE**, or **BUCK** or **BOOST**, depending on the line voltage. (See Table A on page 38). The status LED illuminates.
3. If there is no line power, the Alpha FXM remains in **STANDBY** mode until the line power is qualified. To provide backup battery power to the load, perform a manual start by using the Inverter command: From the Control Menu, scroll till the LCD displays **Inverter**, press **Select** and select **ON**. See ("Figure 28 — LCD Menu Tree" on page 39).
   The Alpha FXM uses auto-frequency detection. When it is first switched on, it senses the line frequency and adjusts its output frequency to match that of the input. The load should be receiving power, if not, perform troubleshooting.

7.1.3 Switching the Alpha FXM from Line mode to Inverter mode

You can force the Alpha FXM to operate in the Inverter mode by manually switching off the input circuit break- er when in Line mode. Doing so effectively disconnects any line power to the Alpha FXM simulating a power outage which triggers the Alpha FXM to switch to the inverter mode of operation.

Procedure:

1. Switch off the input circuit breaker. The LCD shows **INVERTER**, the status LED starts flashing to show that the Alpha FXM is running on backup battery power. Confirm that the load is receiving power.

7.1.4 Switching the Alpha FXM from Standby mode to Inverter mode

When AC is not present and the loads need AC Power, the Alpha FXM can be forced to output AC using energy from the batteries. To force the inverter on, refer to the **CONTROL MENU**, shown in Figure 28, and **INVERTER** in Table B.

7.1.5 Switching the Alpha FXM from Inverter mode to Line mode

The Alpha FXM remains in the Inverter mode for as long as the input circuit breaker is switched off. Backup power is provided to the load until the batteries are drained to a preset level which triggers the Alpha FXM to shutdown automatically. If it is not necessary to operate the Alpha FXM in the Inverter mode, switch the Alpha FXM back to the Line mode as soon as possible by closing the AC input circuit breaker.

Procedure

1. Switch on the AC input circuit breaker. The Alpha FXM qualifies the line power. The LCD displays **RETRAN**, then shows **LINE**, or **BUCK**, or **BOOST**. (See Table A on page 38). The status LED illuminates steadily.

   If the Alpha FXM constantly switches between **INVERTER** and **LINE** modes because of frequent disturbances on the line, the Alpha FXM input parameters should be broadened from Normal to Generator. See Table B, **Sense Type.** Also see the specifications: “Boost/Buck/Line Transfer Thresholds”.
   In the Generator mode, the range of acceptable input frequency and voltage are expanded to accept fluctuations and disturbances as created by a generator.

7.2 Operating from the Control Panel Interface

The LCD control panel provides “at a glance” monitoring. This panel, when used along with the **CANCEL, SCROLL** and **SELECT** buttons, allows you to program, make measurements, and troubleshoot the Alpha FXM350. Figure 27 shows the layout.
The Alpha FXM350 is monitored and controlled with a series of menus and submenus. The Menu Tree is shown in Figure 28.

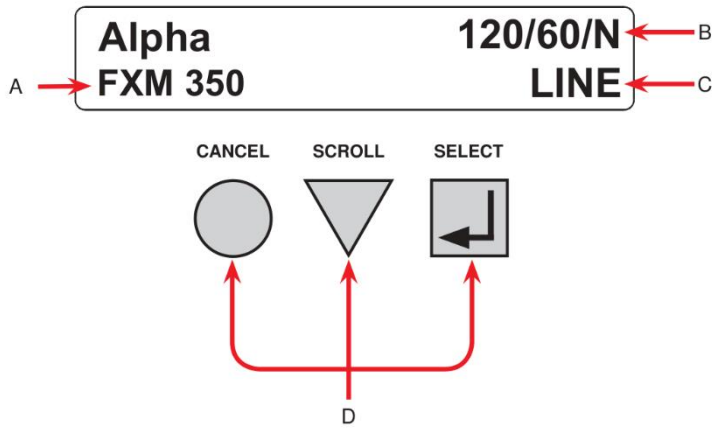

Figure 27 — LCD Control Panel Logo Screen

A **Alpha FXM model name**

B Alpha FXM voltage configuration - 120 Vac or 230 Vac Alpha FXM Frequency - 50 Hz or 60 Hz
Sense Type setting - Normal (N) or Generator (G); see "7.2.2 The LCD Control Menu" on page 40, Table B, Sense Type.

C **Present operating mode** - See (Table A). (LINE mode shown in Figure 27)

D Control buttons:
SELECT - Pressing SELECT moves you down 1 level in the menu tree or accepts a change when programming. Also scrolls through current alarm/fault list.
SCROLL - Pressing SCROLL moves you through the submenus
CANCEL - Pressing CANCEL moves you up one level in the menu tree.

7.2.1 Operating Modes

The Alpha FXM operating mode, (see Table A) automatically changes as a result of changes in the line. Refer to Chapter 10, Specifications, for Boost/Buck/Line transfer thresholds. The LCD panel automatically updates to reflect the change.

Table A — UPS Operating Modes

LCD display	Description
SHUTDOWN	The Alpha FXM inverter is switched off. Line power is disconnected from the load.
LINE	The Alpha FXM is switched on. Line power is provided to the load.
BOOST1	When the input voltage is lower than the nominal voltage, the Alpha FXM raises line voltage without using the batteries. Automatic voltage regulation (AVR) is enabled.
BUCK1	The Alpha FXM lowers line voltage without using the batteries. AVR is enabled.
INVERTER	The Alpha FXM is providing backup battery power to the load. See INVERTER in Table B on page 40.
RETRAN	The Alpha FXM is transferring from INVERTER mode to Line mode.
TRAN	The Alpha FXM is transferring from the state it is now in into Inverter mode.
STANDBY	The Alpha FXM is switched on and waiting for the line power to be qualified or the user to clear some faults. CAUTION: Do not touch the AC output terminals; they may still be energized.
BYPASS	This mode is manually set from the Control Menu. See Figure 28, “Control Menu, INV BYPASS”. This locks the unit into line mode and turns off the battery charger so the unit can work with a manual break-before-make bypass switch. AVR will be disabled.

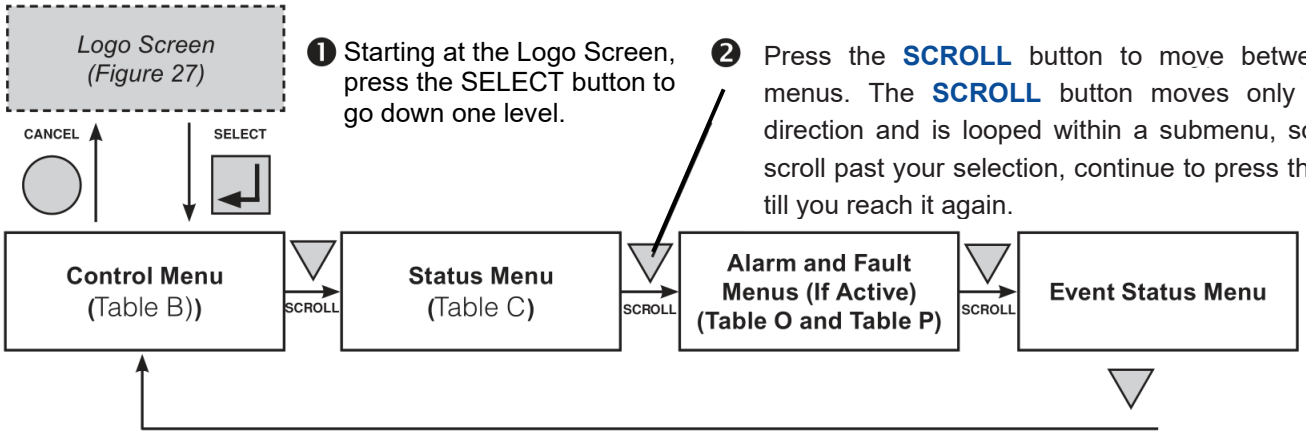

❶ Starting at the Logo Screen, press the SELECT button to go down one level.

❷ Press the **SCROLL** button to move between the menus. The **SCROLL** button moves only in one direction and is looped within a submenu, so if you scroll past your selection, continue to press the scroll till you reach it again.

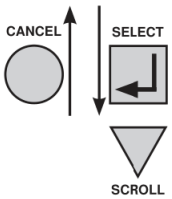

❸ Press the **SELECT** button to enter the submenu. Then press the **SCROLL** button to cycle through the submenu items. The **SCROLL** button moves only in one direction, so if you overshoot, you have to go all the way around the submenu again.

The CONTROL MENU (Table B) lets you control, program and adjust the Alpha FXM for connection to traffic intersection equipment or other applications. You can control the:

- INVERTER
- DC CONNECT
- BYPASS
- BATT TEST
- BT TS DOD
- AUTO TEST
- SHUTDOWN
- SHUTDOWN AC
- SHUTDOWN DC
- SENSE TYPE
- FUNC MODE
- VOLTAGE
- FREQUENCY
- QUAL TIME
- BATT COMP
- DATE FRMT
- CLOCK FRMT
- INV RECORD
- CHGR CUR
- RELAY TEMP
- TEMP DISP
- DAYLIGHT
- CONFIGURE IP

The SYSTEM STATUS menu (Table C) lets you measure various inputs, outputs and other values. The available measurements are:

- VIN
- VOUT
- IOUT AC
- BATT TEMP
- FREQ IN
- OUTPUT PWR
- BATT VOLT
- CHGR CUR
- DATE
- TIME
- INV COUNT
- INV (min)
- SHED TIMER 1, 2 OR 3
- MAC Address
- IP Address
- kWh
- REMAIN TM
- SERIAL NUMBER
- VERSION

The ALARM and FAULT menus that display NO ALARMS and NO FAULTS.

When the front panel alarm LED is on or flashing, press SELECT.

One of the malfunctions listed in Table O and Table P will appear on the LCD. Press the SCROLL button to see if more than one malfunction is present.

Fix the malfunction. Press the SELECT button to clear the malfunction from the screen.

If the malfunction is fixed, the malfunction is cleared from the LCD. If it isn't fixed, it will reappear on the screen.

The EVENT STATUS menu displays the last Alpha FXM event on the LCD. For the event log, see "7.2.5 Viewing the 200-event Log" on page 48.

Press the SELECT button to access the menu. Press the SELECT then the SCROLL button to scroll through the events. To see what a specific event was, press the SELECT button. Press the SCROLL button to see what malfunction triggered the event.

Figure 28 — LCD Menu Tree

7.2.2 The LCD Control Menu

The control menu (Table B) lets you operate the Alpha FXM or program it to suit your operating conditions.

7.2.2.1 Procedure

1. From the Logo screen press the **SELECT** button to go down to the **CONTROL** menu.
2. Press the **SELECT** button to enter the submenu (Table B).
3. Press the **SCROLL** button to move between items in the submenu.
4. When you have reached the item, you want to change, press the **SELECT** button. The item chosen will blink.
5. To toggle between the choices, press the **SCROLL** button. Stop when you reach the choice you want.
6. To make the change, press the **SELECT** button. The blinking stops.

Table B — Control Menu

LCD display	Meaning	Description
INVERTER	Inverter	When inverter mode is set to ON, the Alpha FXM provides backup battery power to the load. This mode of operation is normally activated automatically when line power becomes unavailable, or the line power is not qualified. You can also put the Alpha FXM into this mode during initial startup in the absence of line power or because of unqualified line power. See #31Inverter On/Off in Table I.
DC CONNECT	DC Output Connect Voltage	One of the dry contacts of the FXM350 can be programmed to operate as a control for external DC disconnect and reconnect. (See LVD setting under "7.5.4 Programming the Dry Contacts" on page 75). The dry contact is energized when the battery voltage is greater than the DC Connect set voltage and will de-energize if the battery voltage drops below 42V for 48V system (21V for 24V system). The default reconnect voltage is set to 48VDC and can be adjusted up to 51VDC.
BYPASS	Inverter Bypass	This function can be enabled only when the Alpha FXM is in Line mode. When enabled, the FXM locks into Line mode (no AVR) and disables the battery charger. This mode is used when maintaining batteries. OR Allows the use of a break-before-make manual bypass switch so the Alpha FXM can be shut off for maintenance without interrupting power to the load.
BATT TEST	Battery Test	Starts the battery test that uses depth-of-discharge setting that can be adjusted using BT TS DOD menu.
BT TS DOD		Let's you set the desired battery test depth-of-discharge to a value between 0 and 100%. Make sure that the set time duration is shorter than the max back up time of your battery bank. Otherwise, you will drain the battery and trigger a fault – **Batt Volt Low**. The default value is set to 20% DoD.
AUTO TEST	Automatic Test	Enable/Disable the scheduled self-test.
SHUTDOWN	Shutdown AC and DC	When this function is switched on, the Alpha FXM inverter is shut off. Neither Line nor Inverter power is supplied to the load. If a dry contact was used as a LVD, the LVD will open. See section 7.5.4.
SHUTDOWN AC	Shutdown AC	When this function is switched on, the Alpha FXM inverter is shut off. Neither Line nor Inverter power is supplied to the load.
SHUTDOWN DC	Shutdown DC	When this function is switched on, the Alpha FXM DC output is shut off. Available when dry contact C1 is programmed to be the Low Voltage Disconnect indicator. See "7.5.4 Programming the Dry Contacts" on page 75.
SENSE TYPE	Sense Type	This function can only be used when the Alpha FXM is in Standby or Shutdown mode—see Table A for operating mode descriptions. This function toggles between: NORMAL: The Alpha FXM can operate successfully with most line conditions. OR: GENERATOR: The Alpha FXM input voltage and frequency parameters are expanded so the Alpha FXM can work with the fluctuations caused by a generator or noisy line.

Table B — Control Menu		
LCD display	**Meaning**	**Description**
FUNC MODE	Functional Mode	This function toggles between: AUTOMATIC VOLTAGE REGULATION (AVR): The buck and boost modes are active. OR: QUALITY: The buck and boost modes are switched off; the input voltage is the Alpha FXM output voltage.
VOLTAGE	Voltage	Let's you set the Alpha FXM output voltage setting to 120 Vac or 230 Vac. This should ONLY be done by a qualified technician acting under the instructions of Alpha and Outback Energy Customer Service Department. Failure to contact Alpha and Outback Energy before performing this procedure could void your warranty.
FREQUENCY	Frequency	The frequency can only be changed when the Alpha FXM is in Standby mode. This lets you set the Alpha FXM's frequency setting to 50 Hz or 60 Hz. This should ONLY be done by a qualified technician acting under the instructions of Alpha and Outback Energy Customer Service Department. See "Service and Technical Support". Failure to contact Alpha and Outback Energy before doing this procedure could void your warranty.
QUAL TIME	Line qualify time	Let's you set how long it takes for the Alpha FXM to return to Line mode after the line has become requalified to make sure the line is stable. It can be set to 3, 10, 20, 30, 40 or 50 seconds. The factory default setting is 3 seconds. Also See #34: Line Qualify Time in Table I.
BATT COMP	Battery temperature compensation	Let's you set the battery temperature compensation to match the batteries you are using. It can be set to -2.5, -4, -5 or -6 mV/°C/Cell. The factory default setting is -5 mV/°C/Cell.
DATE FRMT	Date Format Selection	This lets you toggle the Alpha FXM date format between YY-MM-DD, MM-DD-YY, YYY-MM-DD, MM-DD-YYYY, DD-MM-YYYY, YY-TXT-DD, TXT-DD-YY, DD-TXT-YY, YYYY-TXT-DD, TXT-DD-YYYY, DD-TXT-YYYY, YYYY-DD-TXT, YY-DD-TXT, YYYY- DD-MM, YY-DD-MM. The factory default setting is MM-DD-YY.
CLOCK FRMT	Clock display format option	Let's you select which format to display time information: in 24-hour clock format or 12-hour clock (AM/PM) format.
INV RECORD	Inverter record clear	This clears the inverter counter and timer from the LCD system status menu. This does not clear the 200-event log.
CHGR CUR	Charger current	Allows you to set the battery charger current to either 0 A, 1 A, 2 A, 3 A or 4 A for 48V systems and 5A or 6A for 24V systems. NOTE: Setting the battery charger to 0wAill turn the charger off.
RELAY TEMP	Relay temperature	Temperature setting to activate the specified dry contact. The configured dry contact will activate when the set battery temperature is reached. Setting range: 20ºC to 55ºC (68 ºF to 131ºF). The default setting is 55ºC (68 ºF). The relay is de-energized when the temperature drops by 10ºC (18ºF).
TEMP DISP	Temperature display format	The temperature can be displayed in Celsius or Fahrenheit.
DAYLIGHT	Daylight saving option	Switch ON this option to activate Day Light Saving time.
CONFIGURE IP	IP	Let's you configure the UPS IP address

7.2.3 Controlling the external fan by temperature triggered dry contact

The Temperature trigger has a user configurable range of +20°C to +55°C (68 – 131°F). When the battery temperature (monitored by the battery temperature probe) reaches the high temperature threshold, the assigned relay energizes and can be used to turn on the external fan. The relay is de-energized when the temperature drops by 10ºC (18ºF). The default high temperature threshold is 55ºC (63ºF).

7.2.3.1 Procedure

From the Logo screen, navigate to **Control Menu** > **RELAY TEMP**. Press the **SELECT** button and the current temperature display will start flashing. Use the **Scroll** button to change the temperature in 5°C (9ºF) increments. Press **SELECT** to accept the changes or **CANCEL** to abort.

```
RELAY TEMP     120/60/N
        55        LINE
```

7.2.4 Making Measurements

The System Status menu lets you make measurements of various Alpha FXM inputs, outputs, temperatures and other values.

7.2.4.1 Procedure

1. From the Logo screen go to the SYSTEM STATUS menu.
2. Press the SELECT button to enter the submenu (Table C).
3. Press the SCROLL button to move between items in the submenu. When you reach the item, you want to measure, stop pressing the button. The measurement is automatically displayed on the LCD. It is automatically updated every 0.5 seconds.

Table C — System Status Menu

LCD display	Meaning	Description
VIN	Input Voltage	The line input voltage into the Alpha FXM
VOUT	Output Voltage	The Alpha FXM output voltage (true RMS).
IOUT AC	Output Current (AC)	The Alpha FXM AC output current (true RMS).
BATT TEMP	Battery Temperature	The battery's temperature (°C).
FREQ IN	Input Frequency	The frequency of line power into the Alpha FXM (Hz).
OUTPUT PWR	Output Power	The Alpha FXM output power in VA (true RMS).
BATT VOLT	Battery Voltage	The battery output voltage (VDC).
CHGR CUR	Charger Current	The Alpha FXM battery charging current is set to this value (Amps).
DATE		Displayed in the format set by the user.
TIME		Displayed in the format set by the user.
INV COUNT	# Of line failures	Shows how many times the inverter has been active since the last time the inverter counter was cleared. See INV RECORD description in Table B.
INV (min)	Amount of time inverter was on	shows total time in minutes the inverter has been active since the last time inverter timer was cleared. See INV RECORD description in Table B
SHED TIMER1	Amount of time until the dry contact is activated.	The factory default dry contact for this setting is contact C4. SHED TIMER2 and SHED TIMER3 can be field programmed. See "Setting the Timer Contact". This display shows the amount of time left in seconds until the contact is activated. The factory default setting is 2 hours, but this can be changed as shown in "Programming the Dry Contacts and the Clock". C4 is available on the FXM350 if the optional signal assembly is installed—see Section 3.3.2.
SHED TIMER2		
SHED TIMER3		
MAC Address	Communication Module's MAC	The Communication Module's MAC address is displayed.
IP Address	Communication Module's IP	The Communication Module's IP is displayed.

Table C — System Status Menu		
LCD display	**Meaning**	**Description**
kWh	kWh Meter	The accumulated output energy is displayed.
Remain Tm	Remaining Battery Runtime	The remaining runtime of the battery is displayed. Refer to Appendix A to set battery parameters.
Serial Number	Unit Serial Number	The unit serial number of the Alpha FXM is displayed.
VERSION	Software Version	The software version used in this Alpha FXM

7.2.5 Viewing the 200-event Log

Using the LCD display, or web interface, you can view up to the last 200 events the Alpha FXM went through and the malfunctions that triggered each of them. If more than 200 events occurred, the oldest is overwritten. To clear this log, see “Operating the Alpha FXM, INV RECORD.”
To view the events on the LCD display, refer to the following procedure.

7.2.5.1 Procedure

1. From the Logo screen, navigate to the **EVENT STATUS MENU**.

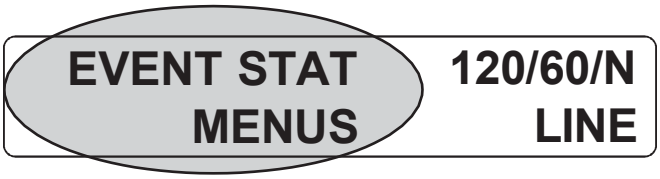

2. Press the **SELECT** button to enter the submenu.
3. The following log screen appears.

DATE EVENT HAPPENED (YY:MM:DD) (Depends on selected date format)

OPERATING MODE THE Alpha FXM350 and Micro350 WAS IN WHEN THE EVENT HAPPENED (Line shown)

TIME EVENT HAPPENED (HH:MM:SS 24-hour clock) (Depends on selected date format)

EVENT COUNTER (Event #1 shown)

4. Press the **SELECT** button. The event counter flashes.
5. Press the **SCROLL** button to scroll through the event counter.
6. When you reach the event, you want press the **SELECT** button.
7. The event loading screen appears and then the log screen reappears with the details for that event.

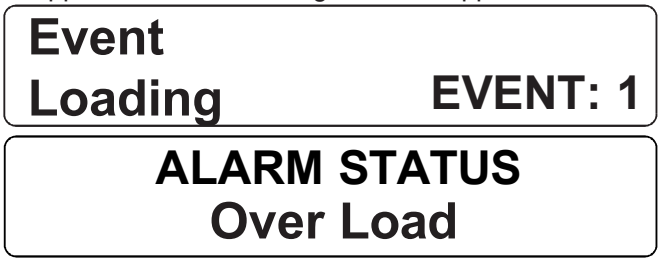

8. Press the **SCROLL** button. One of the faults or alarms, shown in Table O and Table P, is displayed and is the malfunction that triggered the event.

7.3 Operating via the FXM Communication Module (Intranet or Internet)

The internet or a company intranet can be used to communicate with the Alpha FXM through the factory- installed FXM communication module. In addition, the Alpha FXM can be monitored and controlled via a web browser or with SNMP protocols.

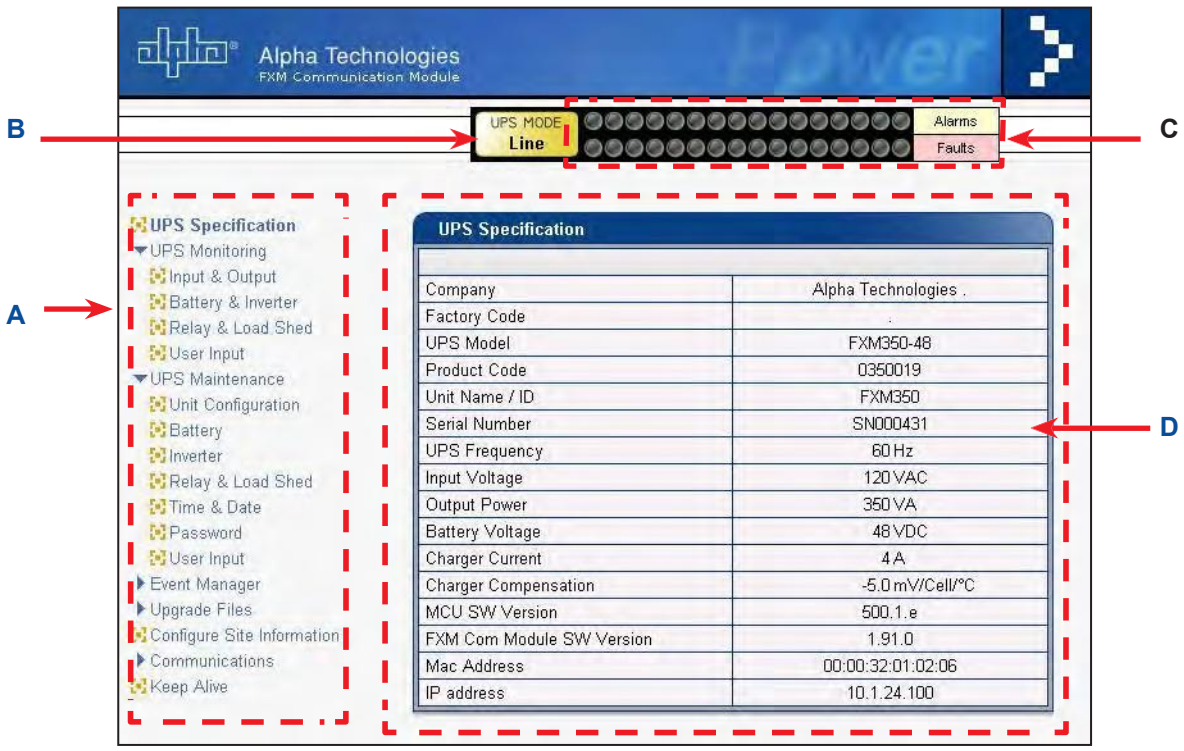

A	Screen selection menus
B	Current UPS operating mode. Updates automatically.
C	Fault and alarm indicators – when a light in this bar is illuminated, move the mouse cursor over the light to determine the malfunction. Double-clicking on the light will send you to the Alarms & Faults screen.
D	Readout screens

Figure 29 — Web GUI (UPS Specification Screen shown)

7.3.1 Installation and Set Up

The following tools and materials are needed:

- Computer with network card and web browser
- Cross over cable or hub
- The UPS Final IP Address and Subnet Mask and if needed the Default Gateway and the DNS Server addresses

CAUTION

To successfully complete this procedure, you should have a working knowledge of network protocols and how to configure them. Consult your network administrator for details.

If multiple UPS are installed on the same network, configure each unit's IP address before the installation. (See "Figure 27 — LCD Control Panel Logo Screen" on page 37.) Each UPS on the network MUST have its own unique IP address.

7.3.1.1 Procedure

1. Connect the Alpha FXM to a personal computer with either the cross over cable or a hub.
2. Open the web browser on the computer.
3. Configure the network card to talk to the FXM communication module. The module's default address is http://192.168.0.90.
4. Cut and paste the IP address into the browser and press ENTER.
5. Select **Communications > Configure TCP/IP** in the home screen (Figure 29).
6. Configure the TCP/IP properties according to your network's requirements.
7. Click **Apply Settings**.

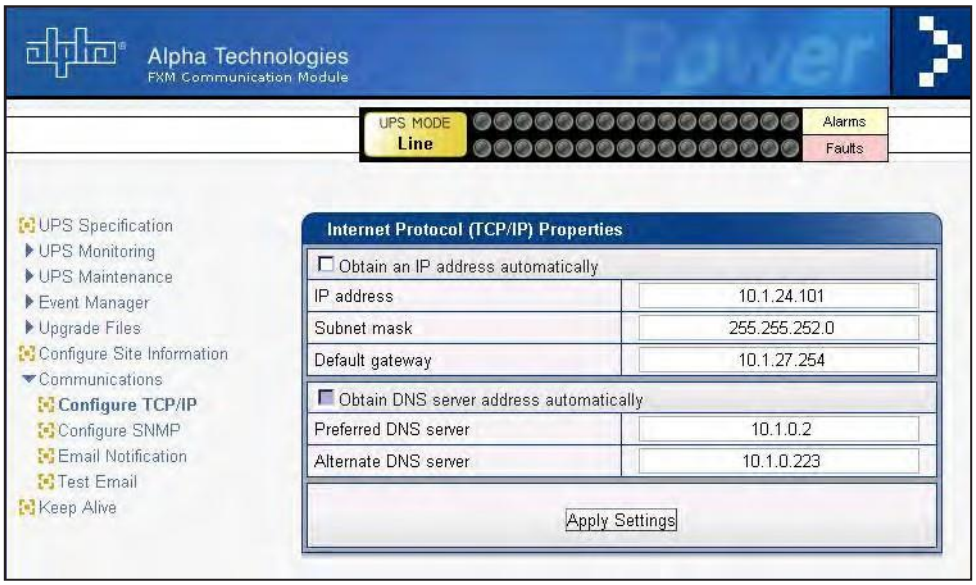

Figure 30 — Alpha UPS Monitor: UPS Communications screen

7.3.2 UPS Specifications

This screen displays the Alpha FXM350 specifications.

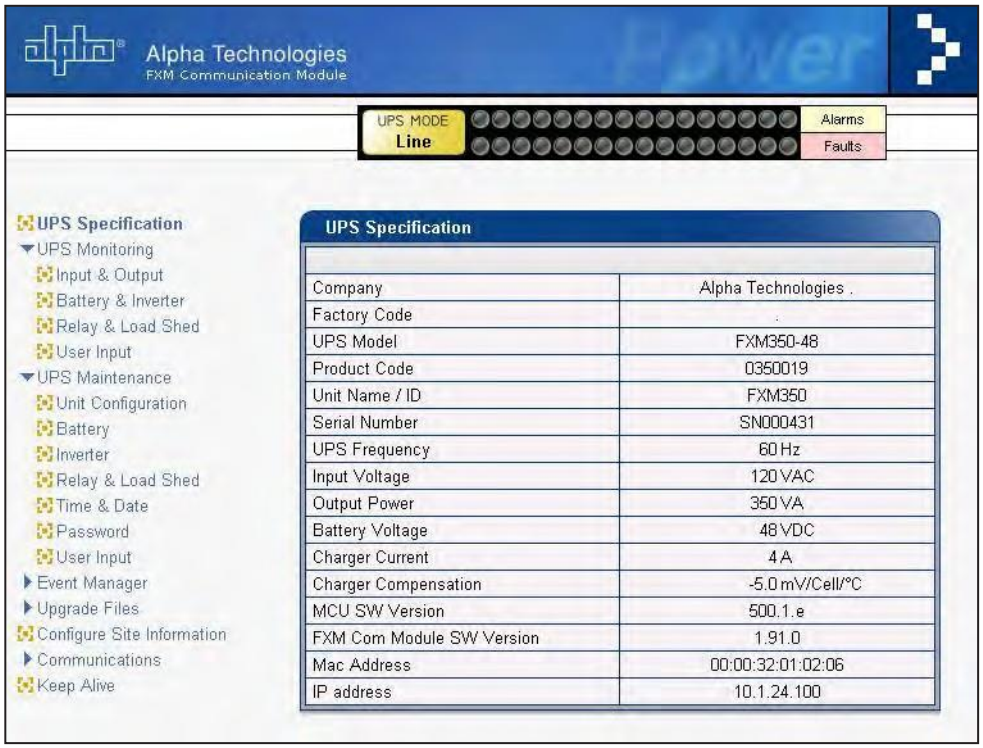

Figure 31 — Web GUI: UPS Specification screen

7.3.3 UPS Monitoring

These read-only screens show the Alpha FXM current input and output values and other measurements.

7.3.3.1 UPS Monitoring > Input & Output

Shows the current line input and Alpha FXM output values and the Alpha FXM present operating mode.

NOTE:

Voltage 2 and Current 2 are the output voltage and current of the 24 VAC output.

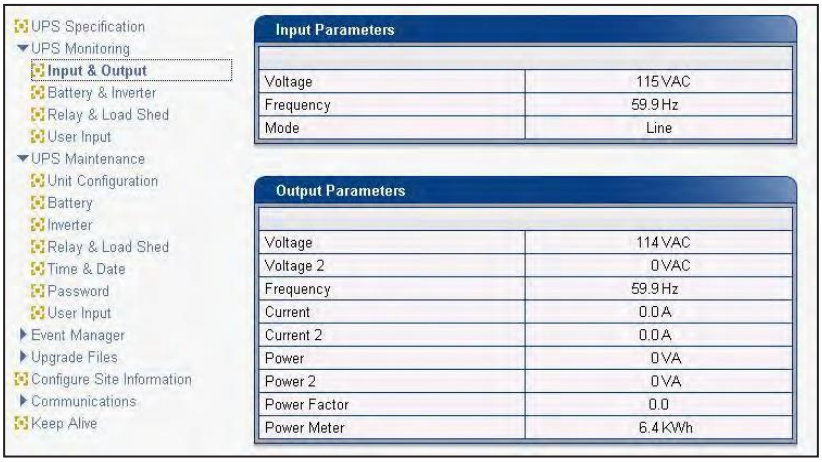

Figure 32 — Web GUI: Input & Output screen

7.3.3.2 UPS Monitoring > Battery & Inverter

Shows the battery string status and how many times and for how long the inverter has been active.

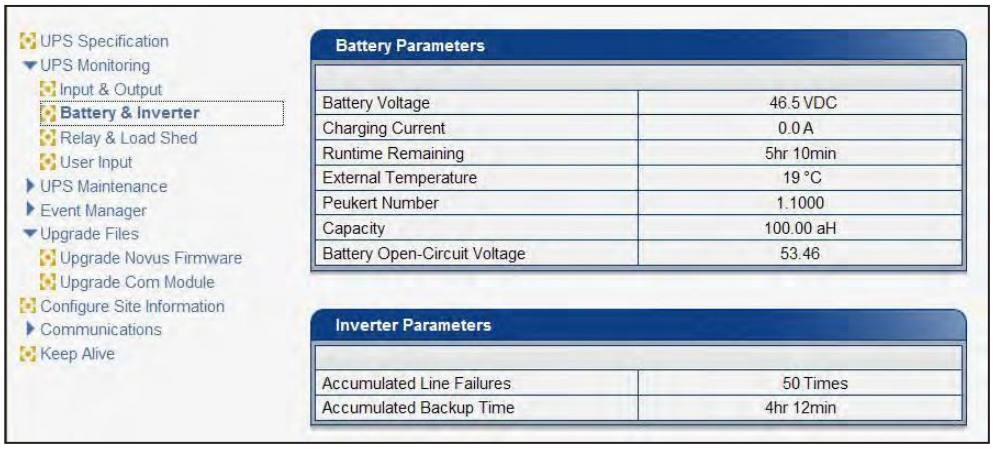

Figure 33 — Web GUI: Battery & Inverter screen

7.3.3.3 Monitoring > Relay & Load Shed

Shows how the front panel dry contacts are configured. If any relays are used for load shedding, the time set- ting is shown.

Figure 34 — Web GUI: Relay & Load Shed screen

7.3.3.4 Monitoring > User Input Status

Shows the current status of the user programmable inputs 1 to 4.

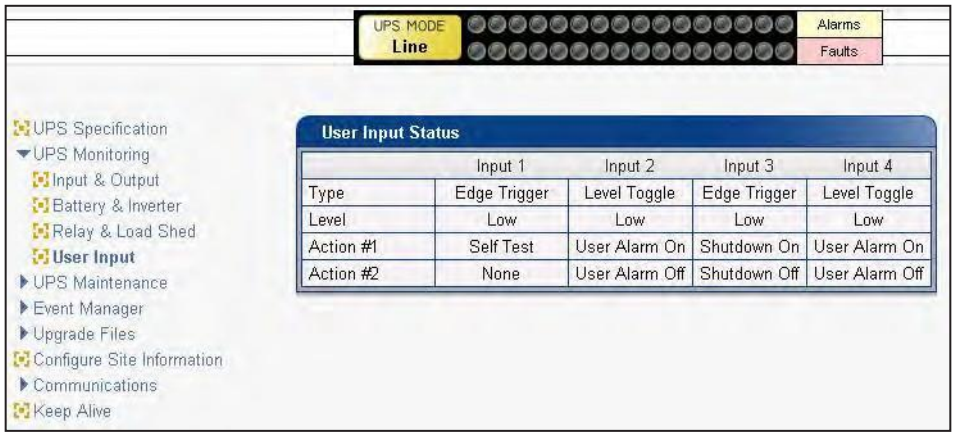

	Input 1	Input 2	Input 3	Input 4
Type	Edge Trigger	Level Toggle	Edge Trigger	Level Toggle
Level	Low	Low	Low	Low
Action #1	Self Test	User Alarm On	Shutdown On	User Alarm On
Action #2	None	User Alarm Off	Shutdown Off	User Alarm Off

Figure 35 — Web GUI: User Input Status screen

7.3.4 UPS Maintenance Menus

Use the UPS Maintenance screens to configure and adjust the Alpha FXM to meet your operating needs. To change parameters, either click the **on/Off** buttons or select an item from a drop-down menu.
To execute the changes, click on the **Update Configuration** button.

7.3.4.1 UPS Maintenance > Unit Configuration

7.3.4.2 Sets the name, input, output and how often the Alpha FXM parameters update.

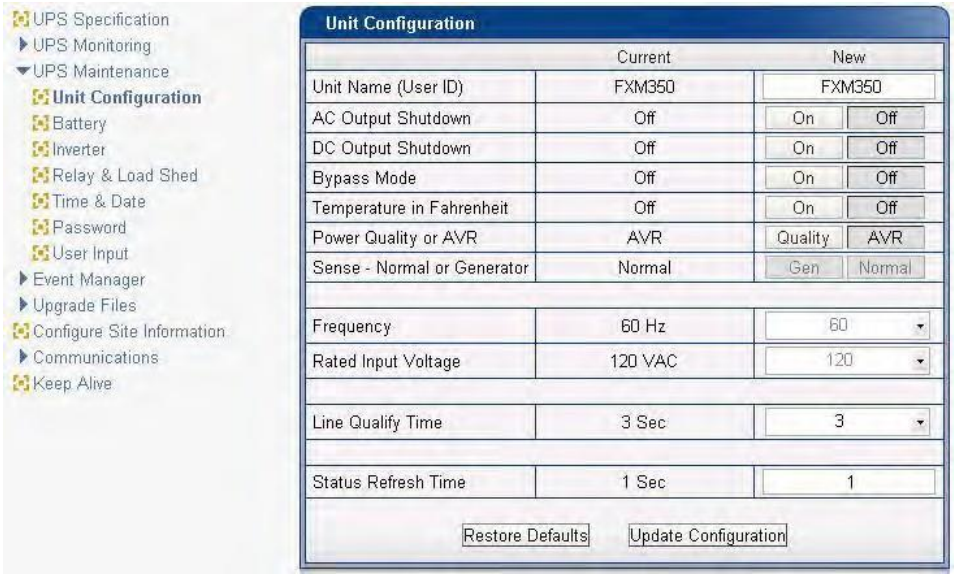

	Current	New	
Unit Name (User ID)	FXM350	FXM350	
AC Output Shutdown	Off	On	Off
DC Output Shutdown	Off	On	Off
Bypass Mode	Off	On	Off
Temperature in Fahrenheit	Off	On	Off
Power Quality or AVR	AVR	Quality	AVR
Sense - Normal or Generator	Normal	Gen	Normal
Frequency	60 Hz	60	
Rated Input Voltage	120 VAC	120	
Line Qualify Time	3 Sec	3	
Status Refresh Time	1 Sec	1	

Figure 36 — UPS Maintenance: Unit Configuration screen

7.3.4.3 Restoring All Parameters to Default Values

The purpose of this command is to reset the Alpha FXM to the factory default parameters in Table D.

CAUTION

This command resets all parameters that are user-configurable. This command is pass- word protected. All previously programmed operation will be lost.

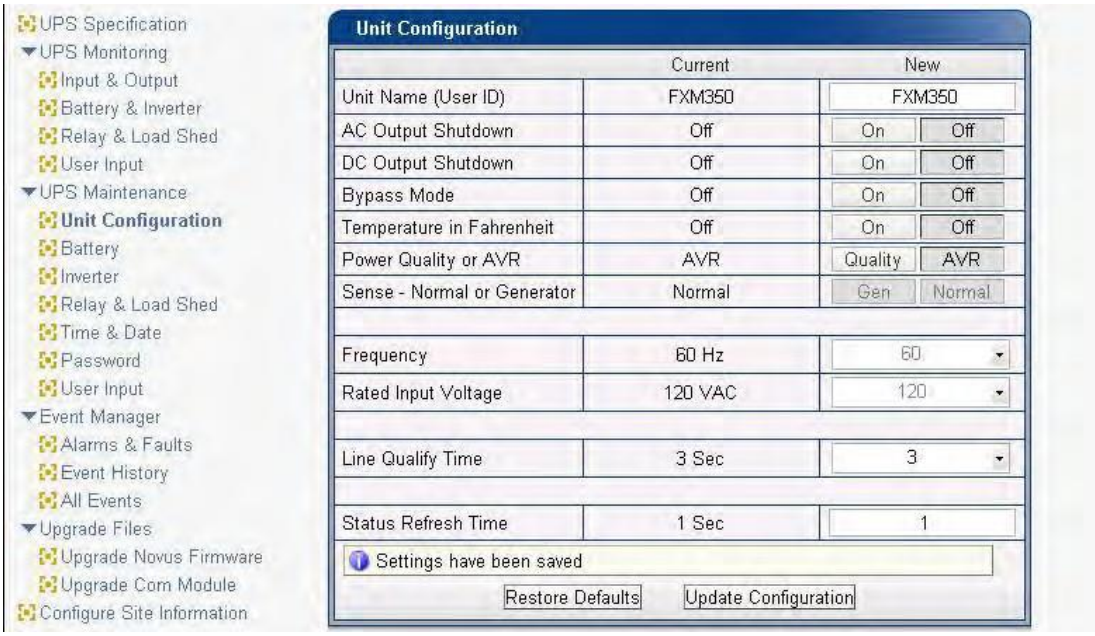

Figure 37 — Restore all default commands

Table D — List of Parameters
Maximum battery charging current
Temperature compensation of battery charging
Property settings of programmable user input #1
Action #1 setting of programmable user input #1
Action #2 setting of programmable user input #1
Property settings of programmable user input #2
Action #1 setting of programmable user input #2
Action #2 setting of programmable user input #2
Property settings of programmable user input #3
Action #1 setting of programmable user input #3
Action #2 setting of programmable user input #3
Property settings of programmable user input #4
Action #1 setting of programmable user input #4
Action #2 setting of programmable user input #4
Start hour of rush hour of time-of-day action period #1
Start minute of rush hour of time-of-day action period #1
End hour of rush hour of time-of-day action period #1
End minute of rush hour of time-of-day action period #1
Start hour of rush hour of time-of-day action period #2
Start minute of rush hour of time-of-day action period #2
End hour of rush hour of time-of-day action period #2
End minute of rush hour of time-of-day action period #2
Format setting of date display on LCD
Line qualify time
Time setting of periodical self-test (minute) (hh:mm)

Table D — List of Parameters
Inverter off delay setting
Number of weeks setting of periodical self-test
Day of the week setting of periodical self-test
Time of the day setting of periodical self-test
Battery low warning threshold setting (%)
Self-test depth-of-discharge setting (%)
Internal temperature setting to turn on cooling fan
Load shed timer1 duration
Load shed timer2 duration
Load shed timer3 duration
Programmable dry contact #1 setting
Programmable dry contact #2 setting
Programmable dry contact #3 setting*
Programmable dry contact #4 setting*
Programmable dry contact #5 setting*
Password setting

*Available with additional optional dry contacts

7.3.4.4 UPS Maintenance > Battery: Allows adjustments of battery string voltage, charging parameters, low battery warning setting, periodic self-test time, and starts the self-test.

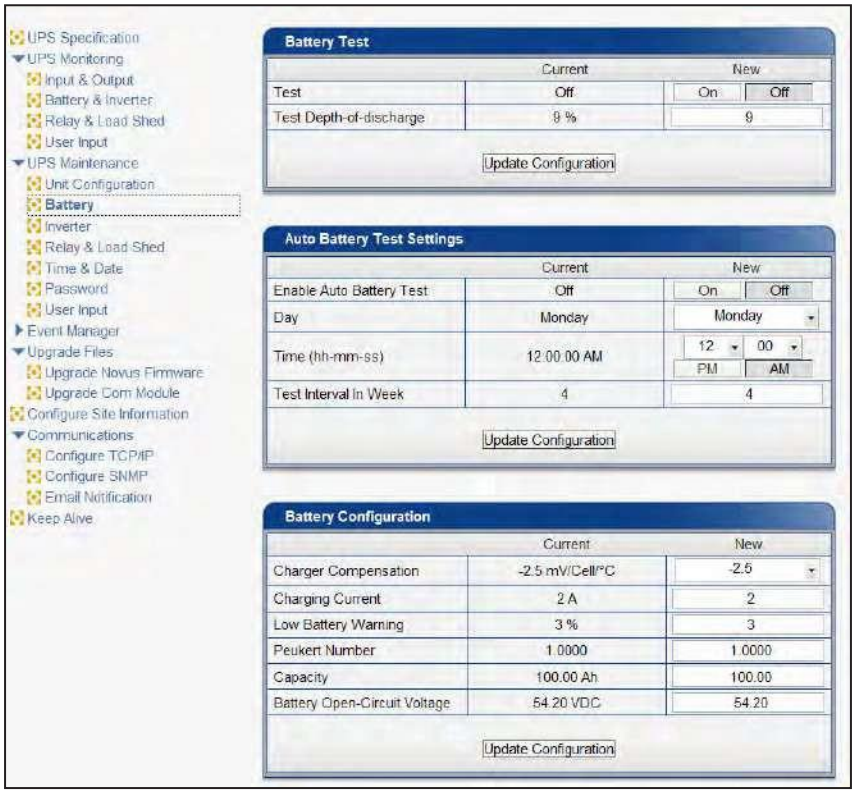

Figure 38 — UPS Maintenance: Battery screen

An accurate battery runtime estimation requires adjustment of the following parameter:

- **Peukert Number:** Refer to Appendix A for calculation of the Peukert number to enter here.
- **Battery Capacity:** This is the rated capacity (Ah) of the battery shown on the battery data sheet. Do not confuse the battery capacity with the Peukert capacity.
- **Battery Open Circuit Voltage:** This number is obtained from the battery data sheet. The battery data sheet shows the value for a single battery, so for a 48 V system where 4 batteries are connected in series, this number must be multiplied by four.

The Battery Runtime Remaining algorithm attempts to calculate the health of the battery to get a more ac- curate prediction of the remaining battery runtime. An accurate estimate of the battery health requires that at least one battery discharge cycle greater than 20% depth of discharge has taken place since the unit was switched on. When the unit is powered up from an off state, the algorithm assumes that a new battery is connected to the unit. Each discharge of greater than 20% will result in a new calculation for the relative battery health. This value is then used in the Battery Runtime Prediction algorithm to compensate for an aging battery. We recommend that the user set up a periodic (every 6 months) battery test with a depth of discharge of at least 20%.

The Battery Runtime Remaining algorithm relies heavily on the battery voltage to predict the remaining run- time. This results in a less accurate predicted runtime during periods when the battery voltage is changing rapidly. The battery voltage typically changes rapidly during the first few minutes of discharge when the unit switches from charging to discharging while the unit is in the Inverter mode. The battery voltage may also change rapidly during the last 20% of the discharge time when the battery is almost drained.

CAUTION

The battery runtime is only an estimation and must not be relied on for critical applications. The battery runtime remaining is applicable only in inverter/backup mode.

7.3.4.5 **UPS Maintenance > Inverter:** Turns the inverter on or off to start or stop backup battery power to the load.

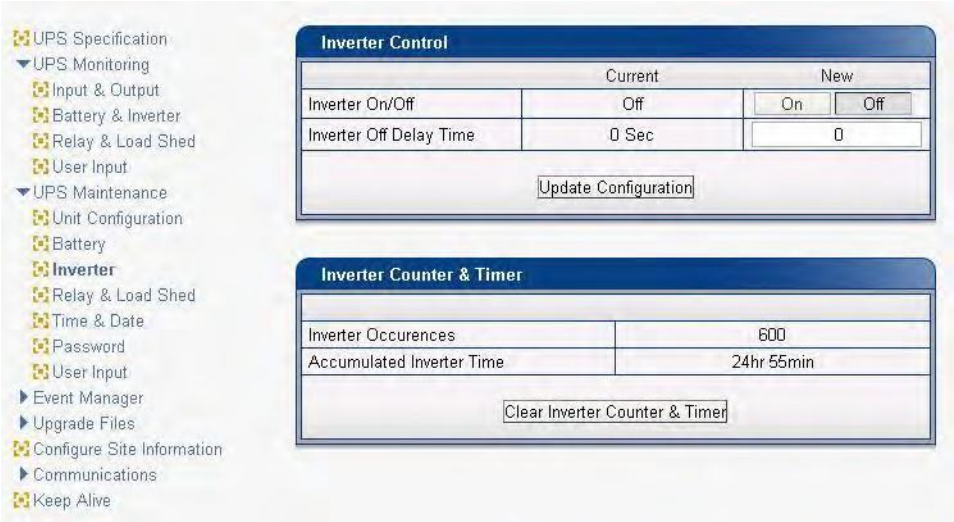

Figure 39 — UPS Maintenance: Inverter screen

7.3.4.6 **UPS Maintenance > Relay & Load Shed:** The Alpha FXM has 2 dry contacts (C1 and C2) on the front panel which can be configured by the user to open or close based on the specific trigger conditions. C3 to C5 are available with optional additional dry contacts. See Table J for a description of all available dry contact functions.

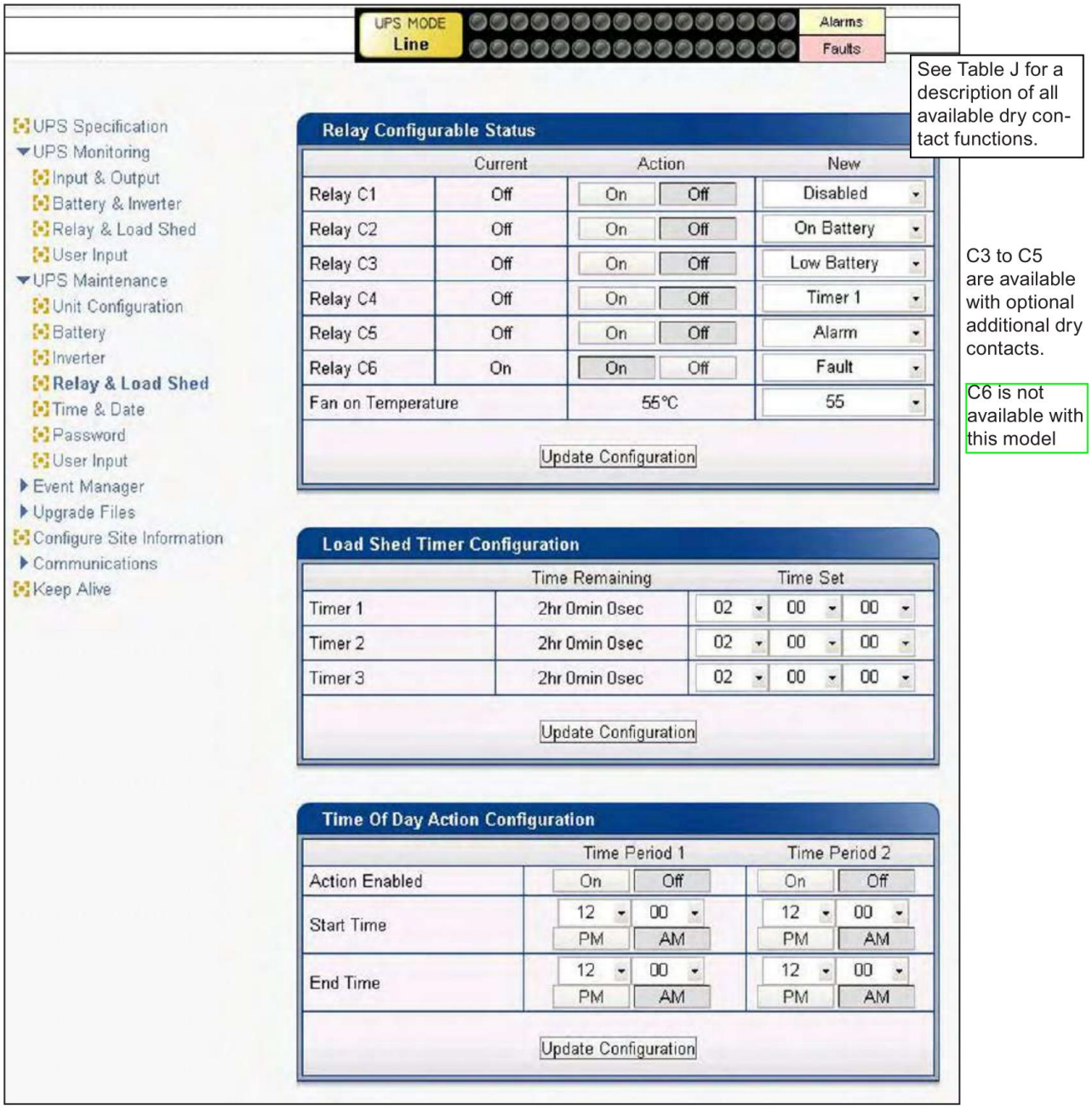

Figure 40 — UPS Maintenance: Relay & Load Shed screen

Programmable Dry Contact Time of Day Action

You can assign a dedicated timer to a dry contact. Upon entering the Inverter operating mode, the timer is activated and begins to count down from a user defined value. When the timer reaches zero, the programmed dry contact relay is activated (Status = ON).

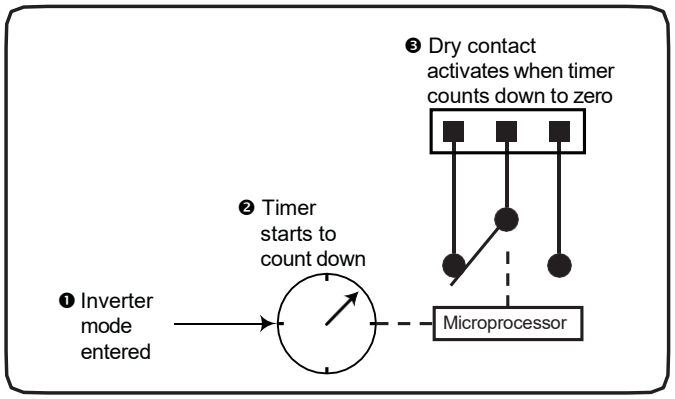

Figure 41 — Programmable Timer Operation

An example of a typical application of this timer-controlled dry contact function is control of a traffic light. When the grid power fails, the Alpha FXM goes into the Inverter mode and continues supplying backup pow- er to the traffic light. Since the batteries supplying the backup power have limited capacity, a timer controlled dry contact is usually configured to switch the traffic light into the flashing amber or flashing red mode after a user-defined period to conserve battery power. This setup works for non-rush hour traffic, but during rush hour, it may be desirable to keep the traffic light running normally as long as backup power is available. To address this issue, a new feature called the **Time of Day Action** has been added to deactivate the timer during a user defined time period up to twice each day.

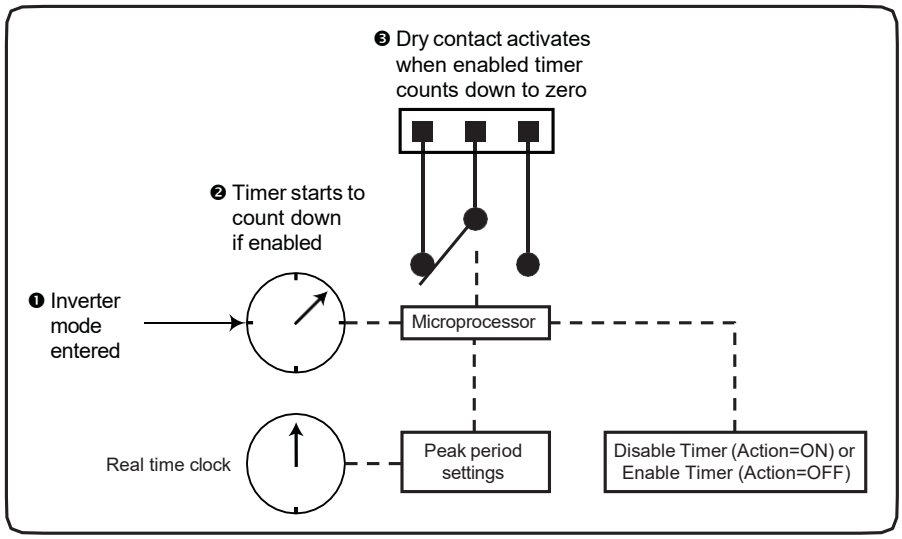

Figure 42 — Time of Day Action Operation

You can define up to 2 peak time periods of the day in the Maintenance > Relay & Load Shed screen:

1. In the Time-of-Day Action Configuration dialogue box, set up the start and end time of the first rush hour under Time Period 1 and the second rush hour under Time Period 2. In this example, during the first time period (7 AM to 9 AM), all 3 timers are disabled (they do not count down at all). Similarly, all timers are disabled during the second time period (3 PM to 6 PM).
2. Select ON under each time period. Click the Update Configuration button under the time periods to store the settings.

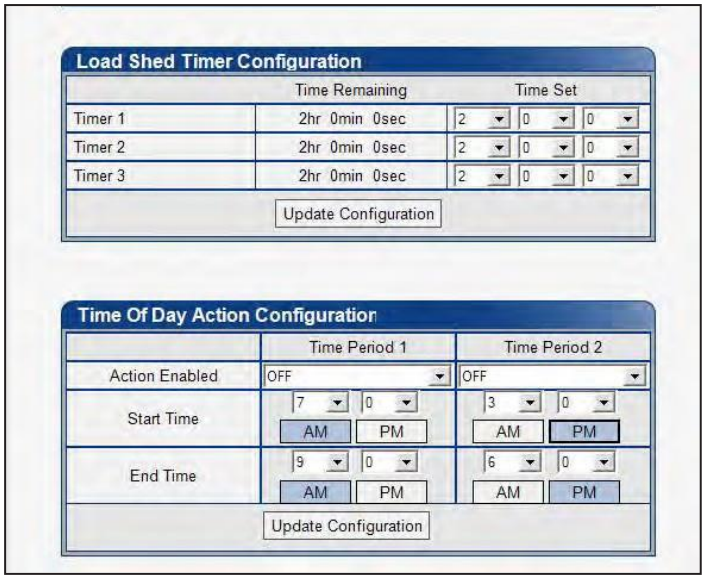

Figure 43 — Time of Day Configuration

3. Confirm your settings in the UPS Monitoring > Relay & Load Shed > Time of Day Action Status screen.
   Once the **Time of Day Action** is configured, the Alpha FXM will automatically disable the timers during the Inverter mode at the defined peak periods.
   You can switch off the **Time of Day Action** by setting one or both time period(s) to **OFF** (Figure 44). The dry contact will be activated by the timer regardless of the peak period settings.

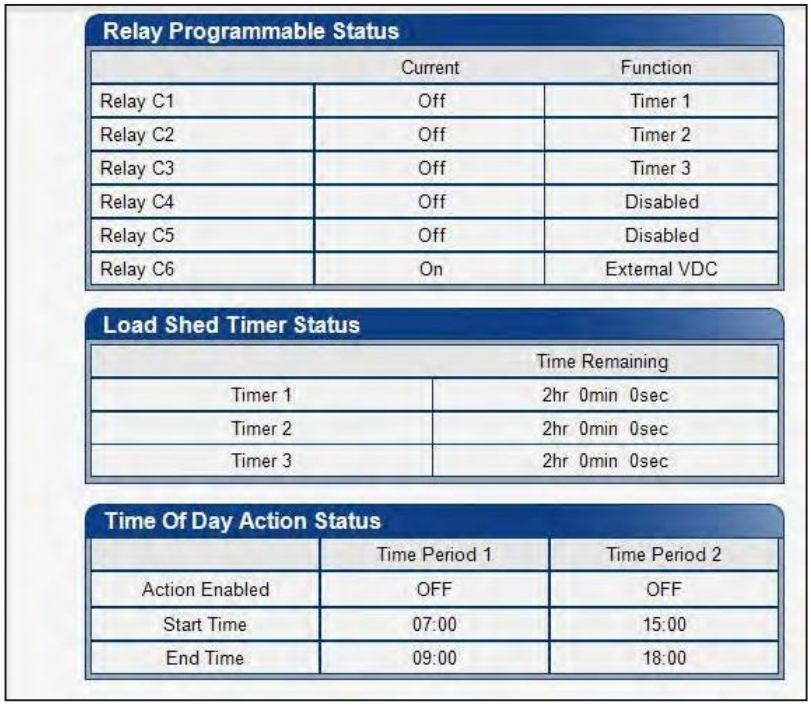

Relay Programmable Status

	Current	Function
Relay C1	Off	Timer 1
Relay C2	Off	Timer 2
Relay C3	Off	Timer 3
Relay C4	Off	Disabled
Relay C5	Off	Disabled
Relay C6	On	External VDC

Load Shed Timer Status

	Time Remaining
Timer 1	2hr 0min 0sec
Timer 2	2hr 0min 0sec
Timer 3	2hr 0min 0sec

Time Of Day Action Status

	Time Period 1	Time Period 2
Action Enabled	OFF	OFF
Start Time	07:00	15:00
End Time	09:00	18:00

Figure 44 — Time of Day Action Status

Controlling the external fan with a temperature triggered dry contact

The Temperature trigger has a user configurable range of +20°C to +55°C (68 – 131°F). When the battery temperature (monitored by the Battery Temperature Probe) reaches the threshold, the assigned relay energizes. The relay de-energizes when the temperature drops 10°C (18°F) from the Set temperature.

This relay can be used to turn on the external fan. Figure 45 shows the Relay Configuration window under the **UPS Maintenance > Relay & Load Shed** screen. As an example, to assign C1 as the Temperature trigger,

a. Select **Temperature** from the drop-down menu.

b. Click **Update Configuration** and the current status updates momentarily.

c. Figure 46 shows the fan-on temperature threshold set at 55°C. To change this value, type the new value in the **Fan on Temperature** box (or use the up/down arrow keys) and click **Update Configuration** to update the current status display.

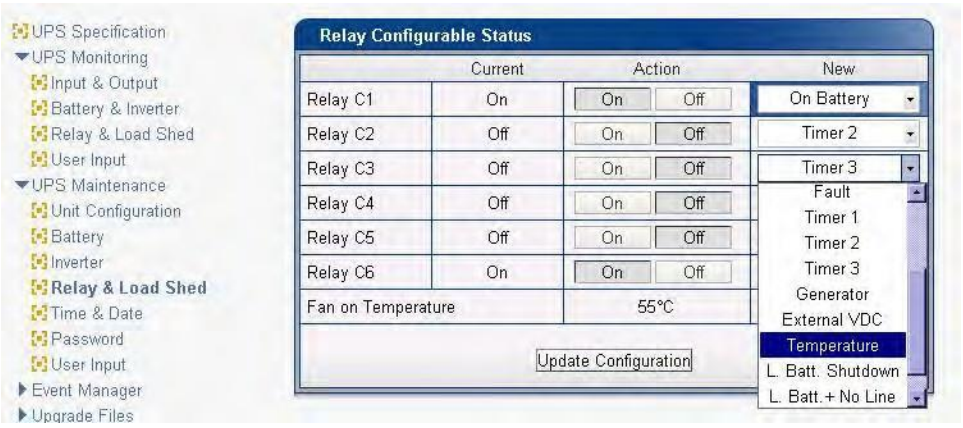

See Table J for a description of all available dry contact functions

Figure 45 — Assigning the Temperature trigger function to a dry contact – Alpha UPS Monitor

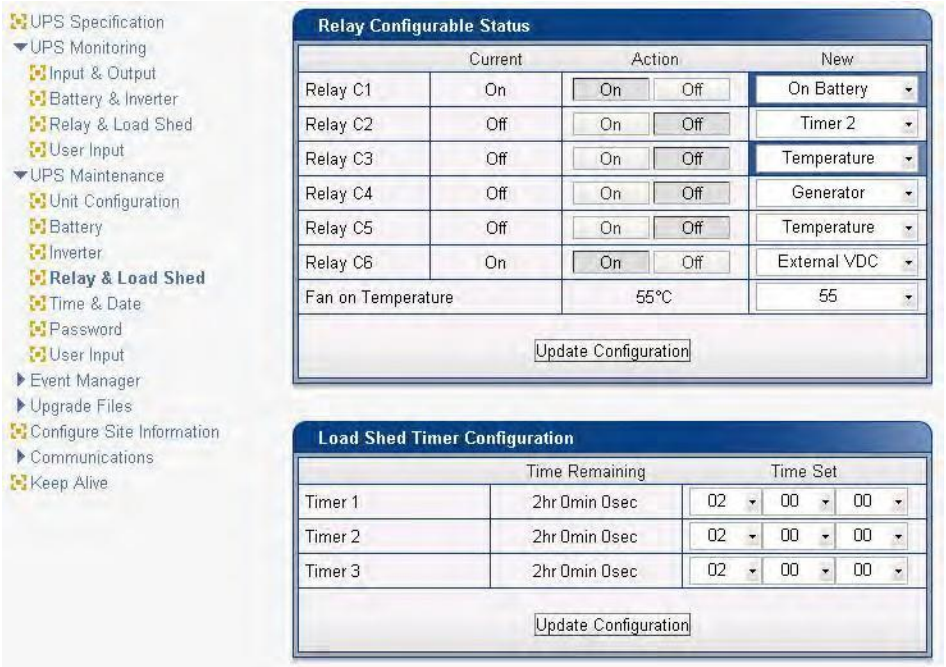

Figure 46 — Setting the Temperature trigger value

NOTE:

C1 can also be used to trigger a High Temperature alarm.

7.3.4.7 **UPS Maintenance > Time & Date:** used to set the Alpha FXM date and time.

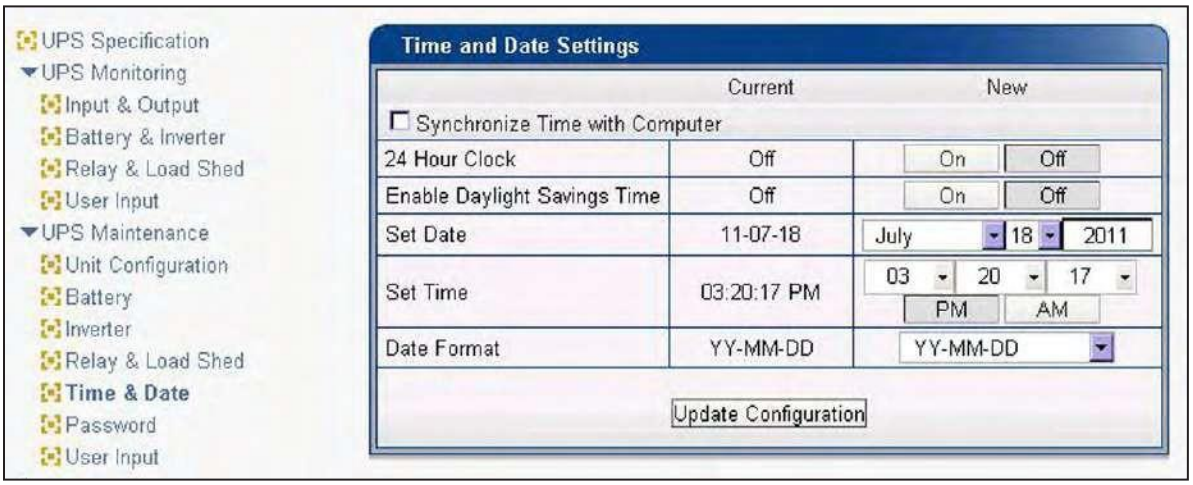

Figure 47 — UPS Maintenance: Time & Date screen

7.3.4.8 **UPS Maintenance > Password:** used to reset the Alpha FXM password, which is limited to 4 alphanumeric characters. The factory set password is 1111.

Figure 48 — UPS Maintenance: Password screen

7.3.4.9 Maintenance > User Input

Two programmable user inputs are available as well as two optional user inputs. They can be user-configured similar to the dry contact relays. Supported functions include: (a) Shutdown, (b) User Alarm and (c) Self-Test.

Any user input can be configured to perform a certain action in response to different trigger types and logic levels. For example, if you want the Alpha FXM to issue an intrusion alarm when the door is opened, you need to wire the door with a switch that triggers a user input every time the door is opened. The following procedure describes how User Input 1 can be configured as an intrusion alarm input.

Procedure

1. Select **UPS Maintenance** > **User Input** to display the **User Input Configuration** window.
2. In the **Input 1** column, select the **Type** down arrow to display the 3 types of available triggers: Edge Trigger, Level Toggle, and Level Alternative. For more information on how triggers work, see "Appendix B - Types of Triggers" on page 98.

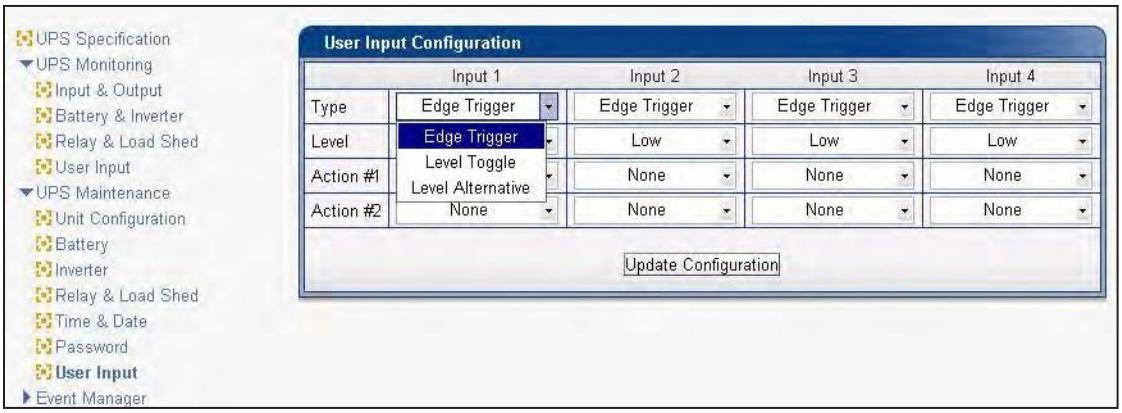

Figure 49 — User Input Configuration: Setting the Trigger Type

3. Select **Edge Trigger**.
4. Select **Low** from the **Level** drop down menu. The User Input goes to logic level "low" whenever it is triggered.

NOTE:

Note: Even though the system is designed for edge trigger the minimum width of the pulse must be 200 mS

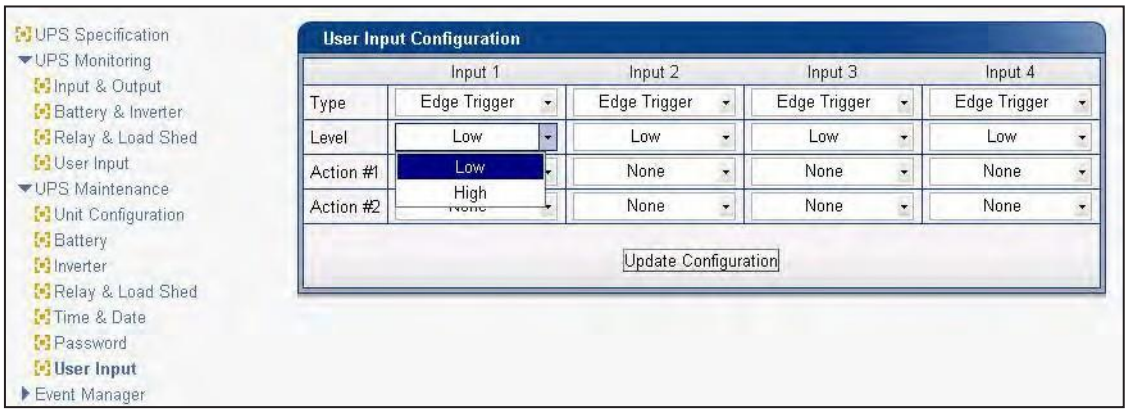

Figure 50 — User Input Configuration: Setting the Logic Level

5. Select **User Alarm on** from the **Action #1** drop down menu.

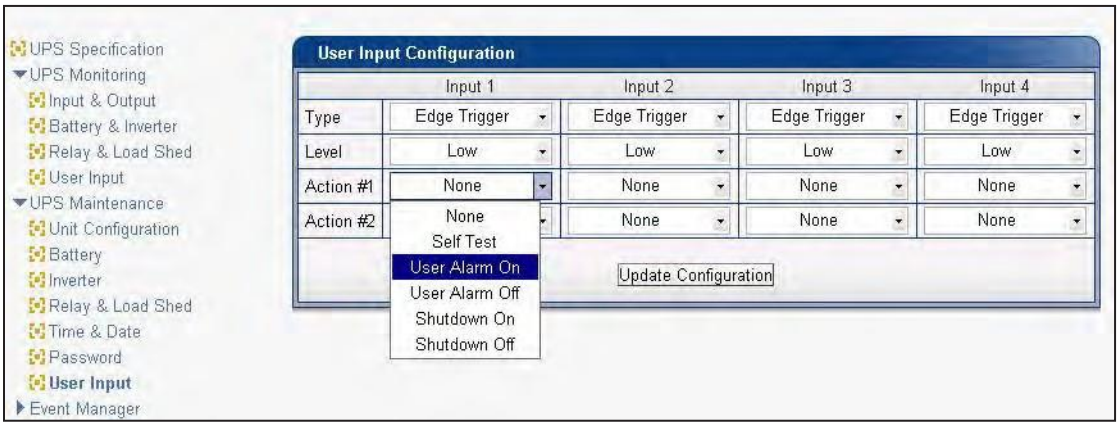

Figure 51 — User Input Configuration: Setting an Action

6. Click the **Update Configuration** button and enter the password to confirm if required.

7. Check the **User Input Current Status** at the **UPS Monitoring > User Input Status** page.

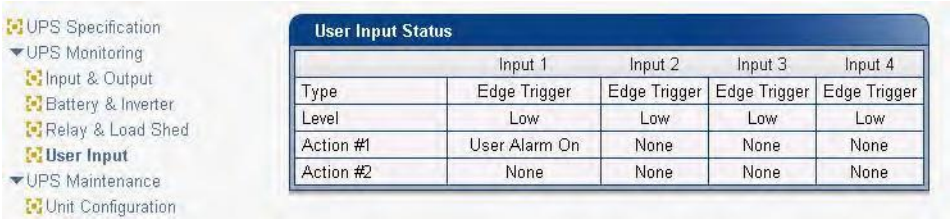

	Input 1	Input 2	Input 3	Input 4
Type	Edge Trigger	Edge Trigger	Edge Trigger	Edge Trigger
Level	Low	Low	Low	Low
Action #1	User Alarm On	None	None	None
Action #2	None	None	None	None

Figure 52 — User Input Current Status

Perform a quick test by shorting the User Input 1 to SC (ground) with a short length of PVC insulated electronic wire. The Alpha FXM should issue a User Input Alarm.

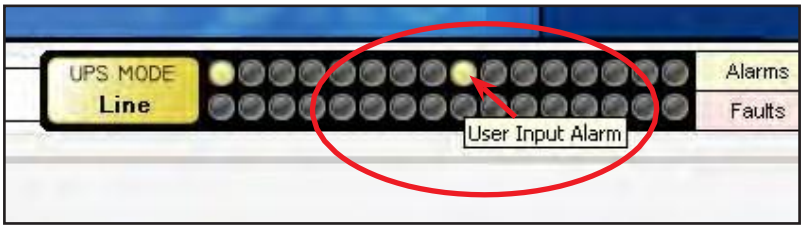

Figure 53 — User Input Current Status

Hovering the cursor over the amber indicator displays the corresponding context sensitive message.

7.3.5 Event Manager

7.3.5.1 Alarms & Faults

This read-only screen shows the operating status of the Alpha FXM. When the fault or alarm indicators on the horizontal bar are illuminated, place the mouse cursor over the light to display the context sensitive message.

Figure 54 — Alarms & Faults screen

7.3.4.10 Event History

This screen shows the last 200 events recorded by the Alpha FXM. Choosing a number in the **Event Index** drop-down box and then clicking on the **View Selected** button displays the updated information about the selected event.

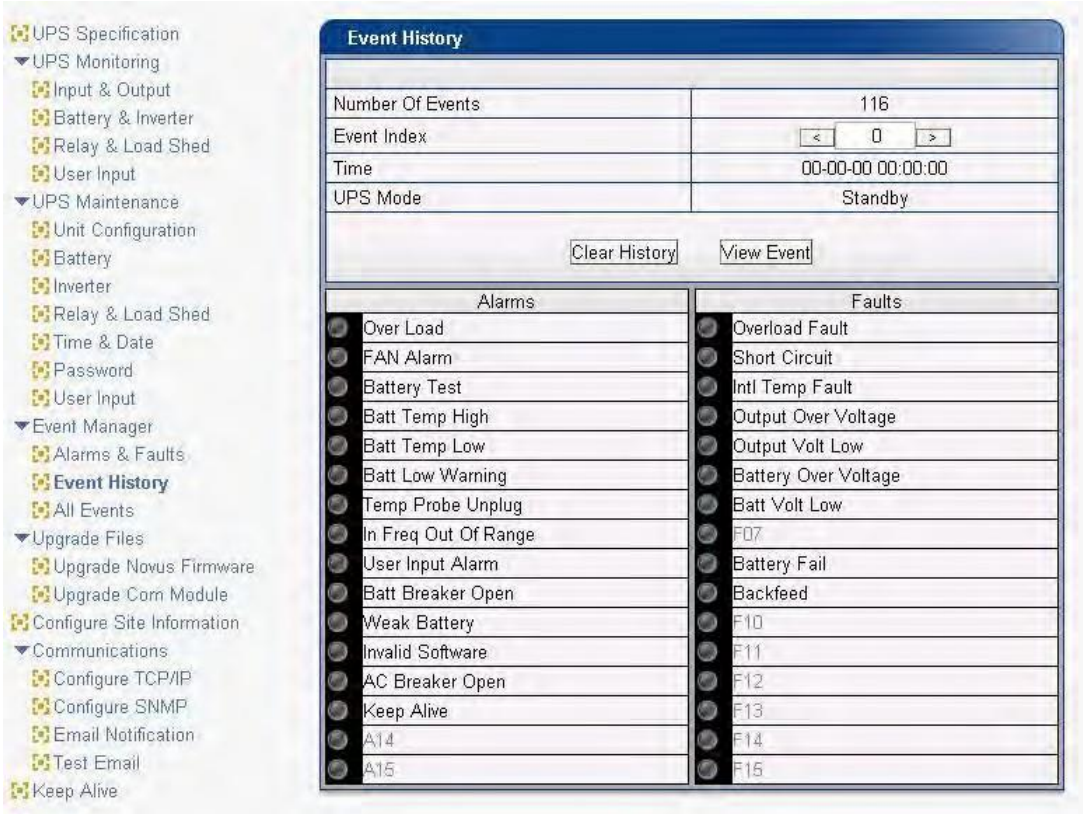

Figure 55 — Event History screen

To view all the events, click **All Events** to open the **Event Log Monitor** window. Clicking on the **Clear History** button clears the log. This action cannot be undone.

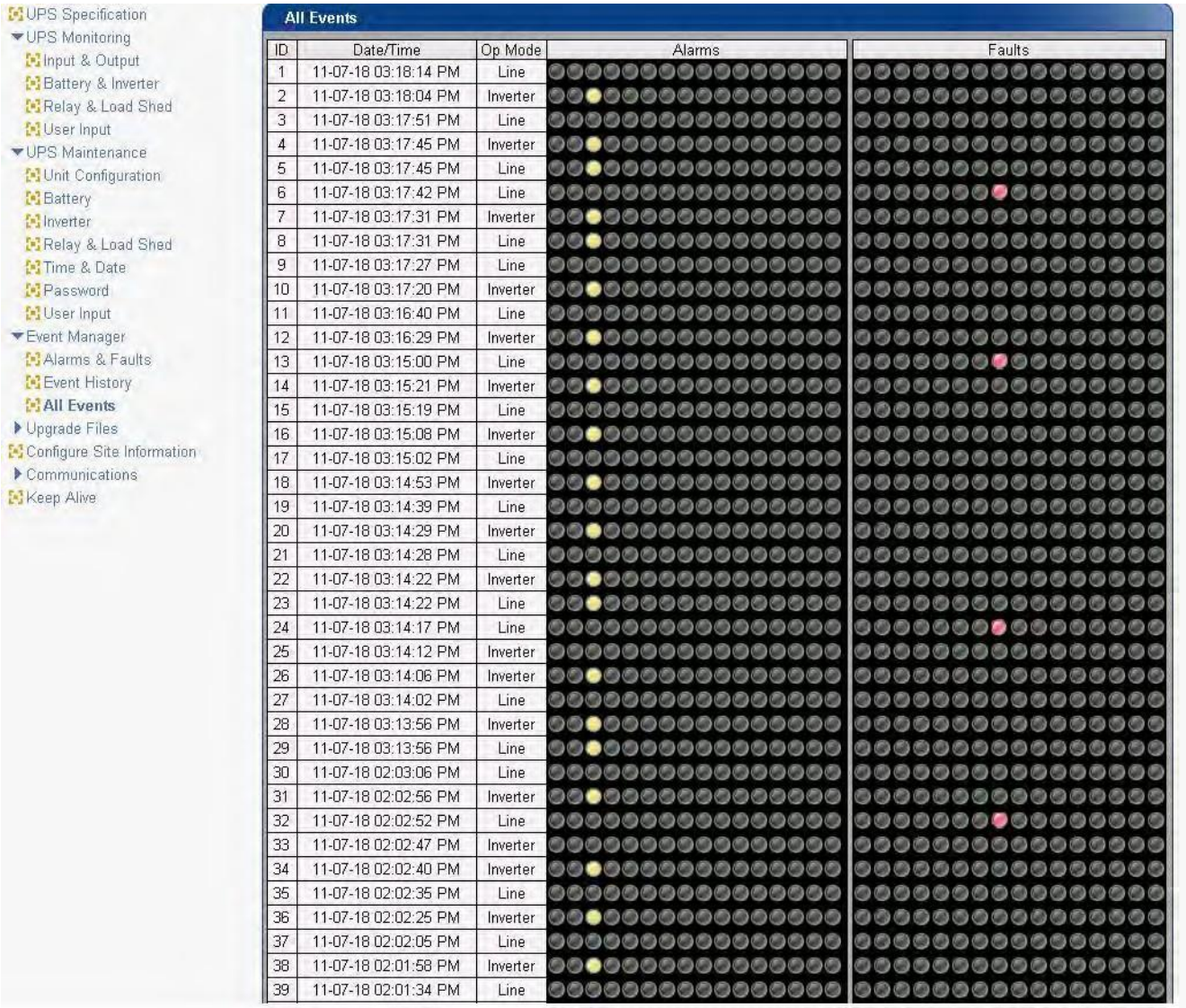

Figure 56 — Event Log Monitor screen

In the **Event Log Monitor** window, the events are displayed by date and time. Scroll up and down the list to select the events you want to see. To download the latest events from the Alpha FXM, click on the **Get Events** button. This process may take a few minutes. When the process is finished the events can be saved to an event file by selecting File > Save As.

To build a complete history of events for an Alpha FXM save all the downloaded events from the unit to the same event file. A maximum of 200 events can be stored on the Alpha FXM The oldest events are replaced by the newest ones. However, saving to the same event file gives the option of appending to an existing event file when selecting **File > Save As**.

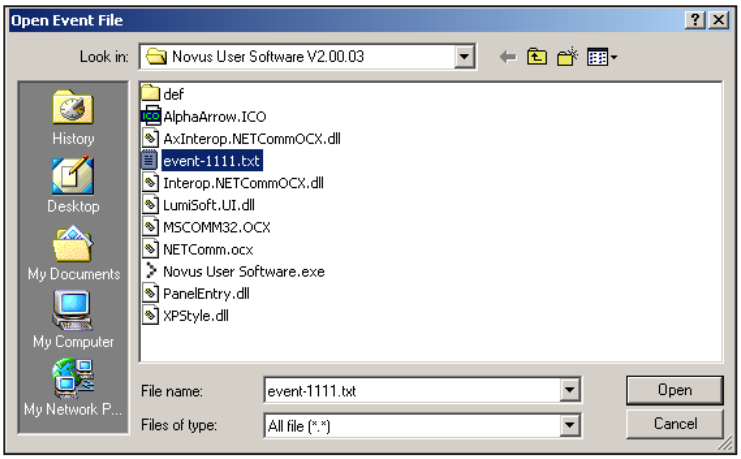

Figure 57 — Event Log Monitor, Open Event File window

To view a previously saved event log without downloading any new events from the Alpha FXM and overwriting the saved event file, select **File > Open** and navigate to the saved event log file.
When opening or saving event log files, only files with the extension “evt” can be opened or closed. This is the file type associated with event log files in the Alpha UPS Monitor.

7.3.6 Upgrade Files

When upgrade files are available, either the microprocessor PCB that controls and monitors the FXM or the FXM communication module PCB can be upgraded

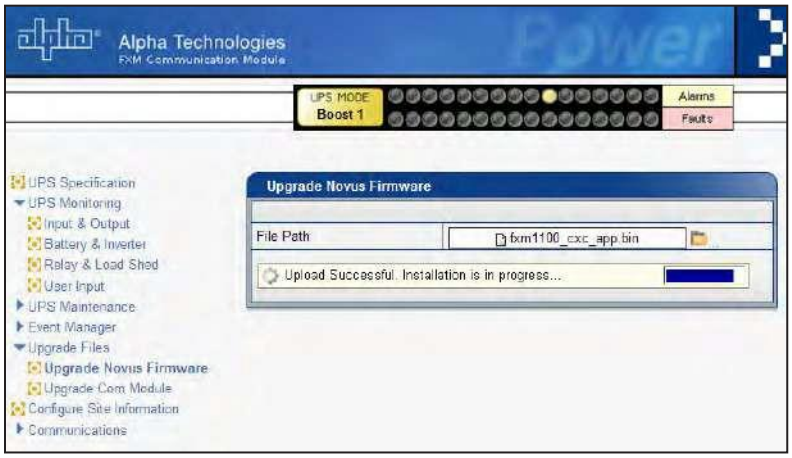

Figure 58 — Alpha UPS Monitor: Upgrade Firmware

To upgrade the Communication module, browse to the .ezip file and click OK to start the upload. This may take a few minutes to complete.

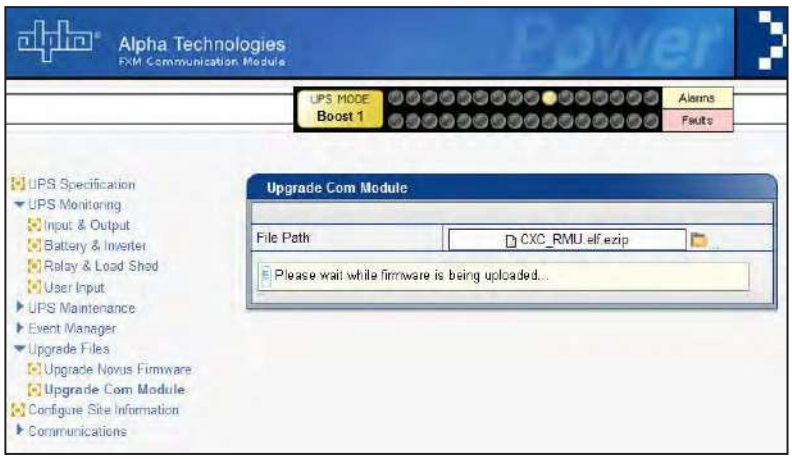

Figure 59 — Upgrade Communication Module

7.3.7 Configure Site Information

This screen is used to enter site location information into the UPS memory.

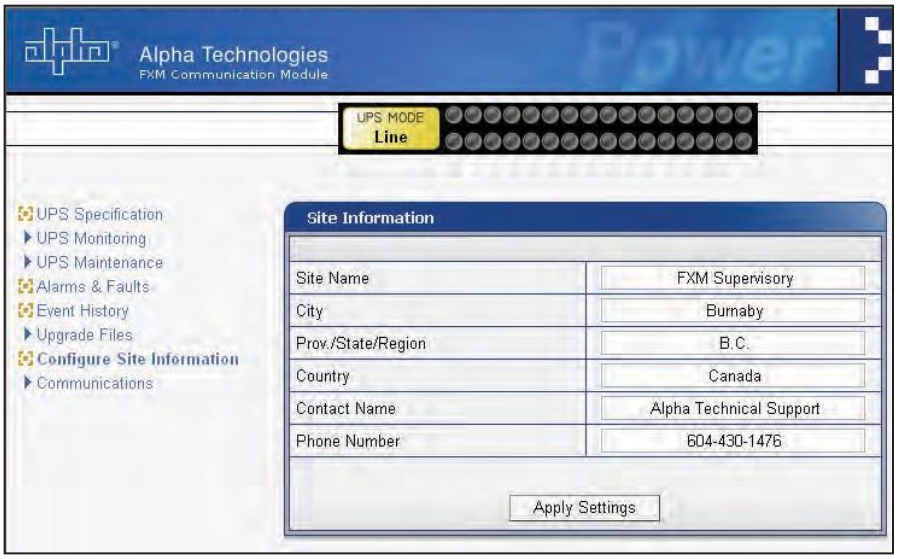

Figure 60 — Alpha UPS Monitor: Configure Site Information

7.3.8 Communications

7.3.8.1 Configure TCP/IP

See section 7.3.1.

7.3.8.2 Configure SNMP

Configure SNMP is used to set the UPS for use with SNMP communications.

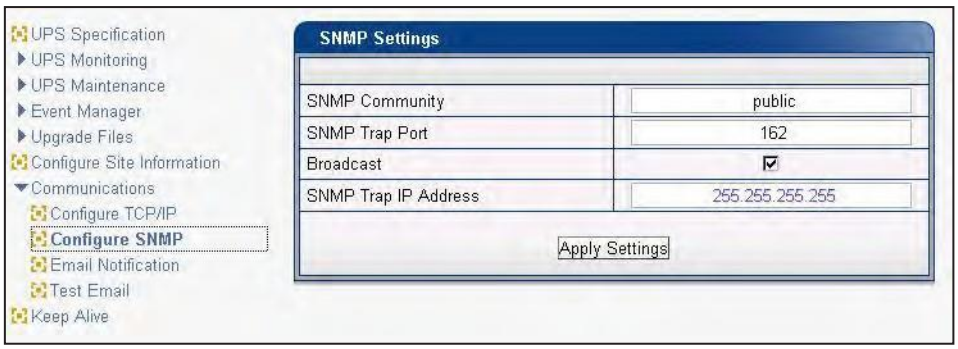

Figure 61 — Configure SNMP screen

7.3.8.3 Email Notification

Email Notification tells the card to send an e-mail message whenever selected UPS events happen.

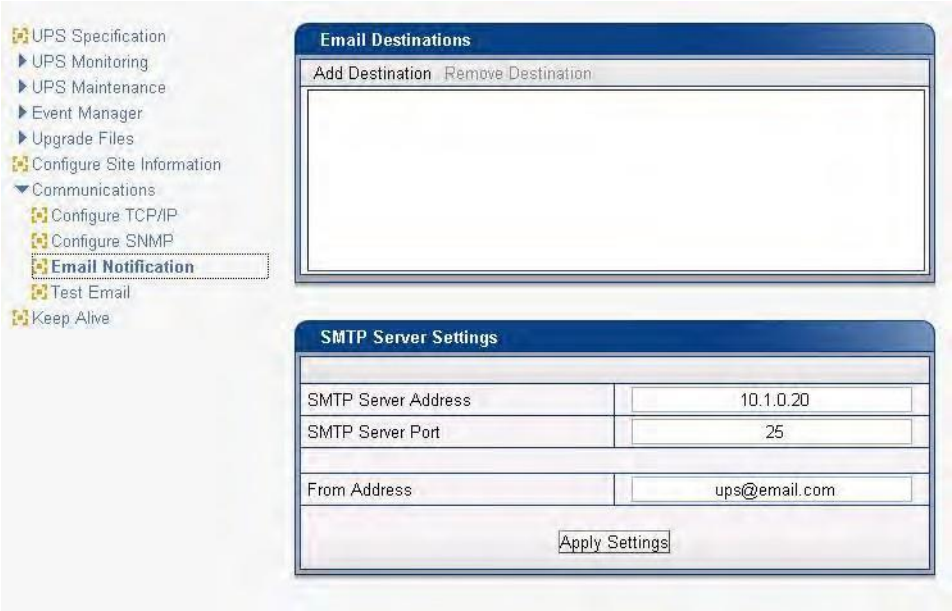

Figure 62 — Email Notification screen

7.3.8.4 Test Email

The **Test Email** feature tests the operation of the email notification option. Mail server settings can be tested as well.

1. Select **Communications** > **Test Email**.
2. If settings have already been saved with the Email Notification option, they will appear under:
   - **Test Email Server Settings** (with a check mark next to **Same as Email Notification**) and
   - **Test Email Destinations**
3. If necessary, modify the mail server settings and press the **Update Configuration** button to save the settings.
4. In the **Test Email Destinations** box, use the default email address or add one if none is specified. Add a subject and test message.
5. Press the **Start Email Test** button.
6. When the test starts running, log messages are displayed in **Test Email Log** text area.
7. If after the test is finished, the test email does not arrive at its destination, copy the text from the **Test Email Log** and email it to AOE's tech support: info@alpha-outback-energy.com

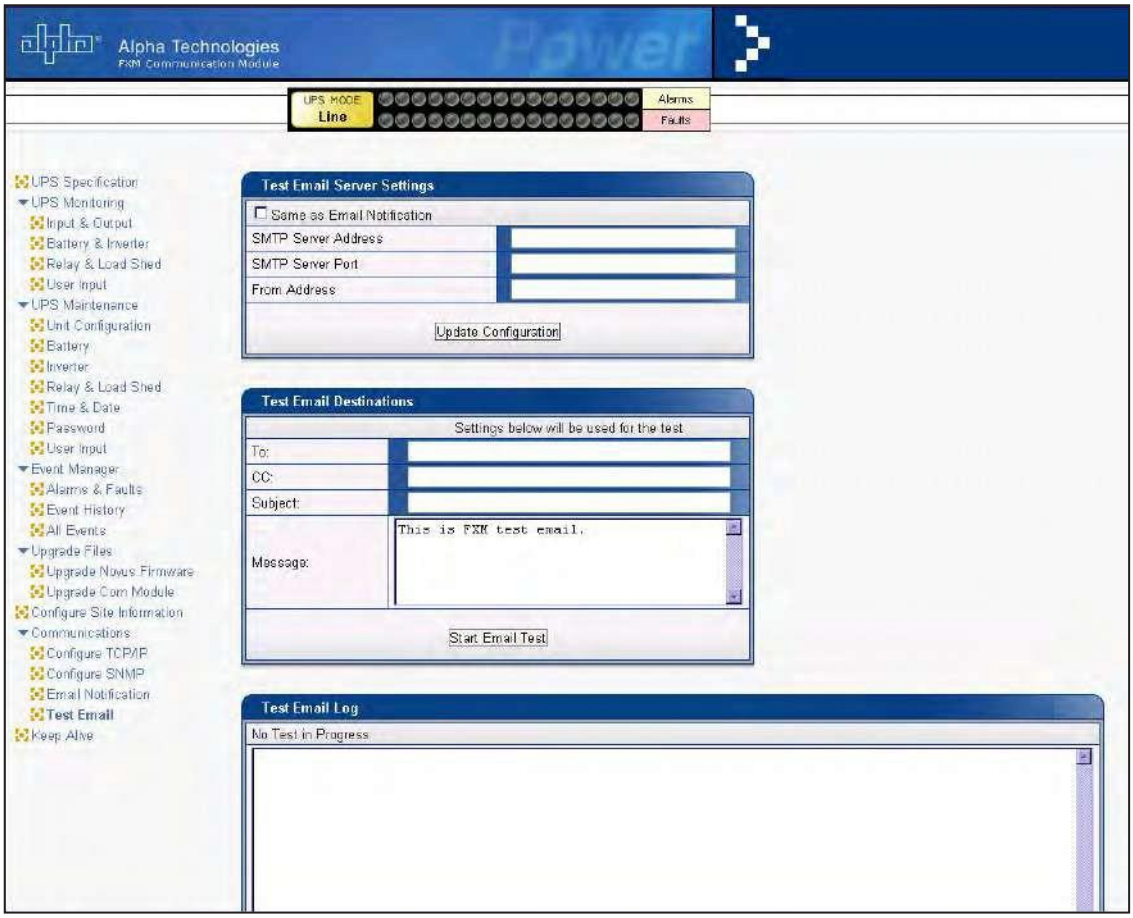

Figure 63 — Test email feature

7.3.9 Keep Alive

Activation of the Keep Alive feature provides a method to restore communications when a communication failure is detected. A reset temporarily removes power and resets the local communications equipment powered by this unit.

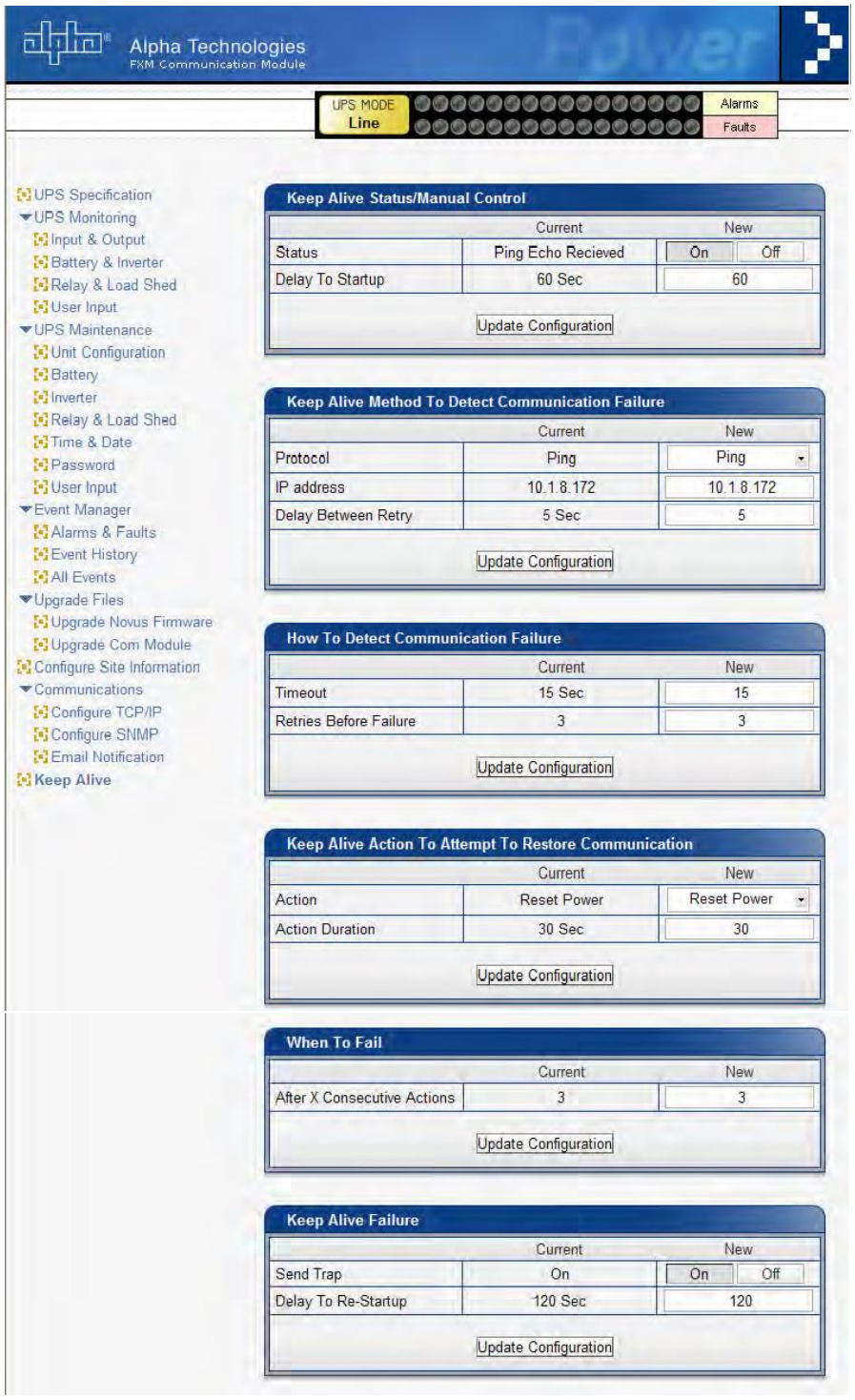

7.3.9.1 Keep Alive status/manual control:

a. The **Status** field allows the user to enable or disable the Keep Alive function. (When disabled, the alarm is cleared.) When the function is **On**, the **Current** column displays the status:
   - Startup Delay
   - Pinging
   - Ping Echo Received
   - Timeout total_number_of_retries/current_retry_number
   - Reset total_number_of_retries/current_retry_number
   - Reset Complete
   - Failure
   - Failure: Startup Delay
   - Failure: Pinging

b. The **Delay to Startup** field allows the user to set the time to the first ping from the enable ping or UPS restart after a ping failure. Minimum = 5 sec, Maximum = 3600 sec.

7.3.9.2 Keep Alive Method to detect communication failure:

a. Ping is the only option in the Protocol field.
b. In the **IP Address** field, enter the IP address of this FXM.
c. In the **Delay Between Retry** field, enter the delay between pings: minimum = 5 sec, maximum = 65535 sec.

7.3.9.3 How to detect communication failure:

a. In the **Timeout** field, enter the ping timeout. Minimum = 2 sec, Maximum = 65535 sec.
b. In the **Retries Before Failure** field, enter the number of pings to repeat before power cycling. Minimum = 1, Maximum = 20.

7.3.9.4 Keep Alive action to attempt to restore communication:

a. The **Action** field has 3 options: reset all power (ac and dc), reset ac power, and reset dc power. This action resets the power for the duration set in Step b. DC reset occurs when one dry contact is set to **LVD**.
b. The **Action Duration** field is how long the output will be shut off by the UPS, Minimum = 5 sec, Maximum = 3600 sec.

7.3.9.5 When To Fail:

a. The **After X Consecutive Actions** field determines the number of times the UPS will go through the ping and power down and back up cycle before registering an Alarm for Keep Alive. Other alarms and events will occur regardless of this value. After the final power cycle, the UPS will issue another ping after the Delay between retry has elapsed. This ensures the destination IP is not alive. The UPS will then set the Keep Alive alarm. Minimum = 1, Maximum = 20.

7.3.9.6 Keep Alive Failure:

a. The Send Trap field allows the email and SNMP trap notification to be switched on and off for the Keep Alive only.
b. The Delay to Re-Startup field configures the delay after the Keep Alive alarm is set and the next ping is sent in delay to restart. Minimum = 5 s, Maximum = 3600 s.

7.4 The Alpha UPS Monitor Interface

The Alpha UPS Monitor graphical user interface (GUI) provides web or Windows-like computer communications with the Alpha FXM. The Alpha FXM can be connected to a computer with a USB cable. The screen and its features, shown in Figure 29, are used to monitor, control and set various parameters like the date and time, determine when to perform a weekly self-test, change the relay configurations, etc. The on-line indicator (F) shows if you are connected to the Alpha FXM.

The AOE UPS Monitor automatically polls the Alpha FXM to obtain its status. If a light or lights are illuminated in the Fault or Alarm fields, the Alpha FXM has a malfunction. Hover your mouse cursor over the light to learn the type of malfunction or double-click on it to go straight to the Alarms & Faults screen.

To control the unit or change settings or parameters, either click on the on/Off buttons, or choose an item from a drop-down menu. Then click on the **Update Configuration** button. If you do not click on this button, the change will not happen.

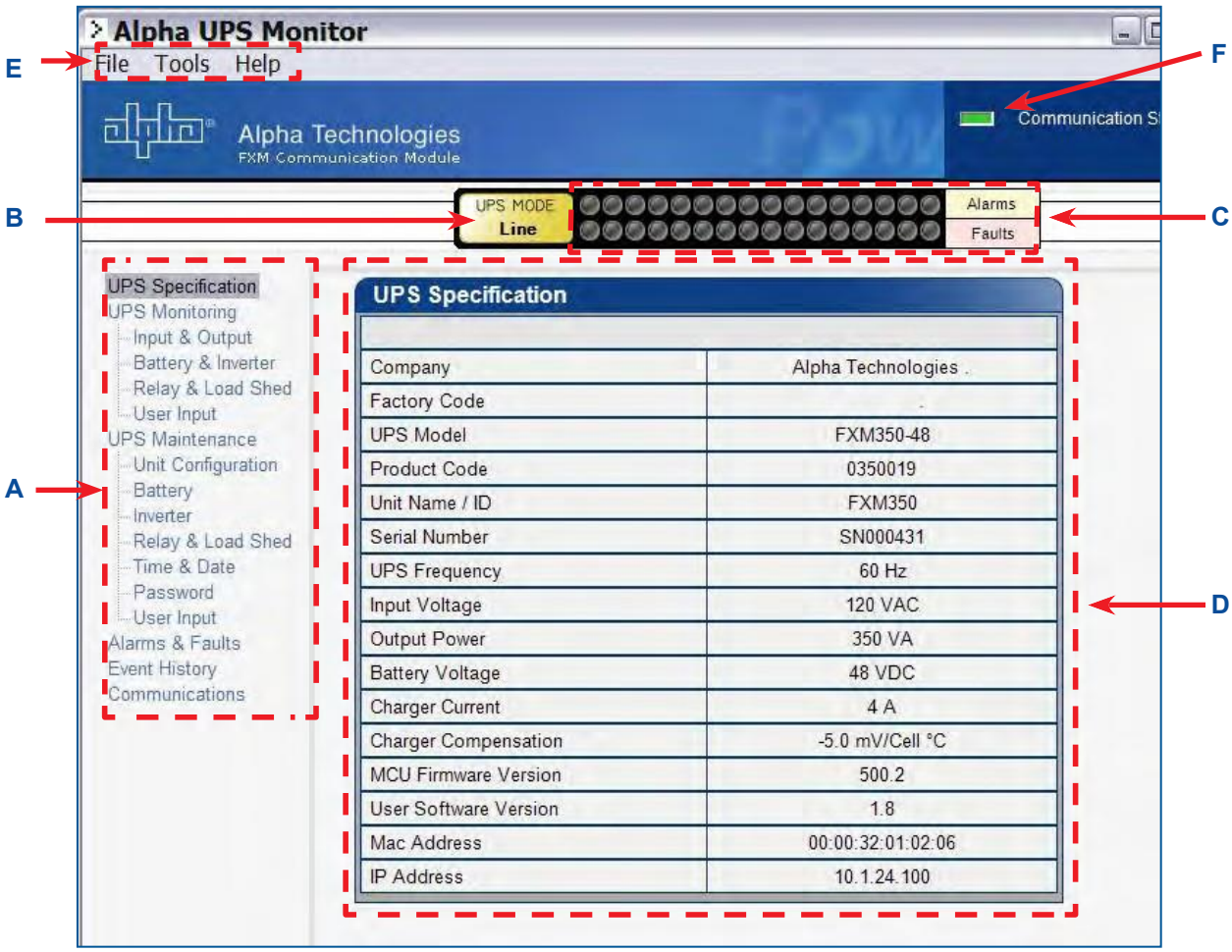

A	Screen selection menus
B	Current UPS operating mode. Updates automatically.
C	Fault and alarm indicators – when a light in this bar is illuminated, move the mouse cursor over the light to determine the malfunction. Double-clicking on the light will send you to the Alarms & Faults screen.
D	Readout screens
E	Drop-down menus
F	Online indicator

Figure 64 — Alpha UPS Monitor (UPS Specification Screen shown)

7.4.1 Installation and Set Up of the AOE UPS Monitor

The following tools and materials are required:

- AOE UPS Monitor, available for download from www.alpha.ca./downloads/
- Windows 2000 or later with Microsoft .NET framework installed
- USB computer cable

7.4.1.1 Checking Your Windows Computer for the .NET Framework

1. Click on the **Start** button.
2. Go to and click on **Settings**.
3. Click on **Control Panel**.
4. Double-click on the **Add or Remove Programs** icon.
5. Scroll through the list of applications. If Microsoft .NET Framework is already in the list, Framework is already installed and you can install the AOE UPS Monitor. If you don't see it listed, you MUST install it from the Microsoft Windows update web site before installing the software.

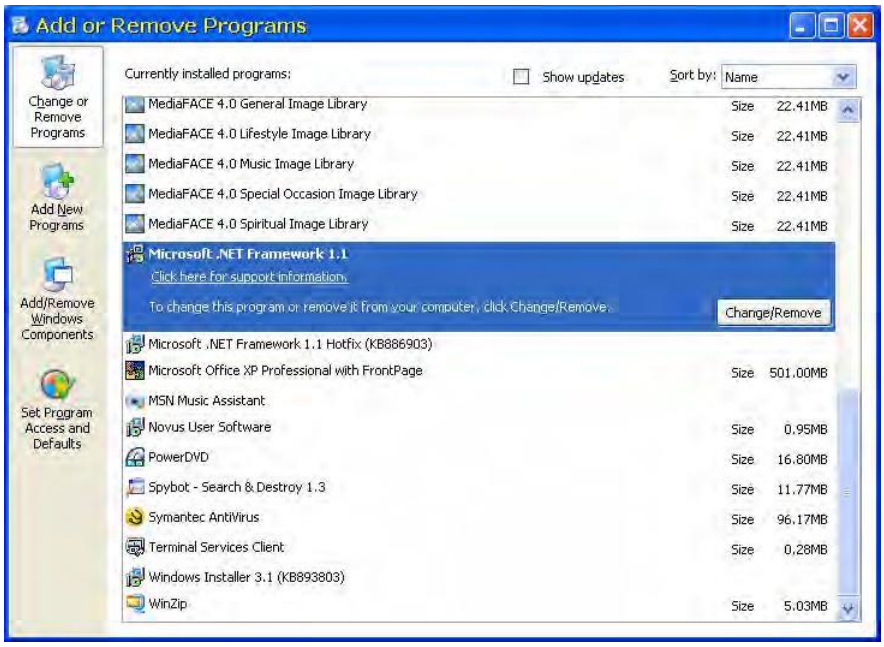

Figure 65 — Add or Remove Programs Window

7.4.1.2 AOE UPS Monitor Installation Procedure

1. Install the AOE UPS Monitor onto your computer. Restart the computer.
   If you install the AOE UPS Monitor on a version of Windows without the .NET framework installed, an error message saying the framework is not installed will appear. Install the framework onto your computer, restart your computer, and then try again to install the AOE UPS Monitor.
2. Connect the computer cable from any USB communications port on the computer to the USB port on the Alpha FXM front panel.
3. To start communications between the computer and the Alpha FXM, do one of the following:
   - Click on the screen's Online Indicator,
     OR
   - In the **File** drop-down menu, click on **Connect to FXM**.

If the computer cannot connect to the Alpha FXM, a pop-up screen appears asking you to check the wiring and your connection to the proper USB port.

7.4.2 AOE UPS Monitor Functions

AOE UPS Monitor interface is similar to the Web interface. Refer to the corresponding heading in section 7.3.

7.5 HyperTerminal Interface

The Alpha FXM front panel has a USB connector. When connected to a PC with Windows® HyperTerminal or other terminal emulation software, the Alpha FXM can be remotely monitored and controlled with the Hyper- Terminal command-line system.

HyperTerminal is a Windows application that helps to connect your computer to other remote computers using one of the USB com ports. The FXM350 has a USB port, not an RS232 port. When the USB device's driver is implemented as a virtual com port it can be used as a normal com port

The HyperTerminal program is included in the Windows 2000 or Windows XP operating systems. Running HyperTerminal on any other operating system requires a 3rd party application designed for this purpose.

The following subsections describe the operation of the Alpha FXM via the USB interface:

- Using the Main menu
- Adjusting and controlling the Alpha FXM
- Programming the dry contacts and the clock
- Viewing the 200-event log

7.5.1 Connecting to a PC with a USB Cable

1. Connect a USB-B, fully shielded, connector cable between the computer port and the Alpha FXM port.
2. Configure the communications parameters as follows:
   a. Windows 2000 or XP, go to **Control Panel > System** then selects the **Hardware** tab.
   b. Click **Device Manager**.
   c. Find and right-click on the USB serial port.
   d. Select **Properties** from the menu then select the **Port Settings** tab to get the window in Figure 66.
   e. Set the fields as shown.

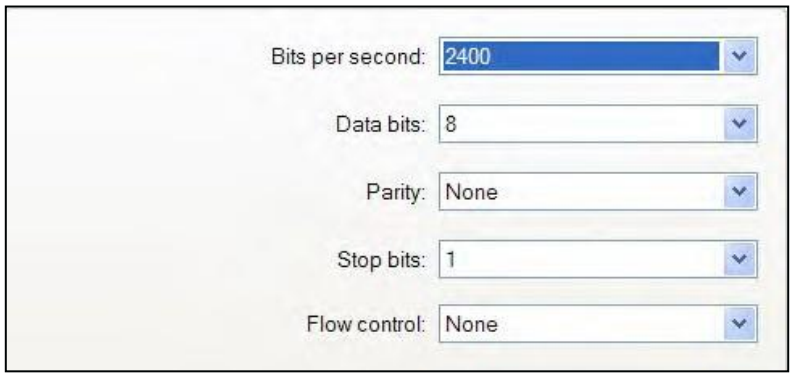

Figure 66 — HyperTerminal communication parameters

7.5.2 Main Menu Screen

Once HyperTerminal is open, ensure that the FXM has connected to the computer. See Figure 67 for connection indicators.

The main menu screen shows the Alpha FXM current input and output values, displays any faults or alarms and gives access to the submenus. The Alpha FXM is controlled by submenu 3.

To access a particular submenu, type in the submenu number and press **Enter**. To update the main menu screen, press **Enter**.

The complete menu tree is shown in Figure 67. Tables describing the Line Status, Output Status, Faults and Alarms displays are given in Table E, Table F, Table G, and Table H.

a. The readings on the main menu screen do not automatically update to reflect changes in the Alpha FXM status. Press **Enter** to update the screen.

b. For many functions you need to enter a password. The factory setting is **1111**.

Submenu Numbers

Status, Faults and Alarms Displays

Shows connected.

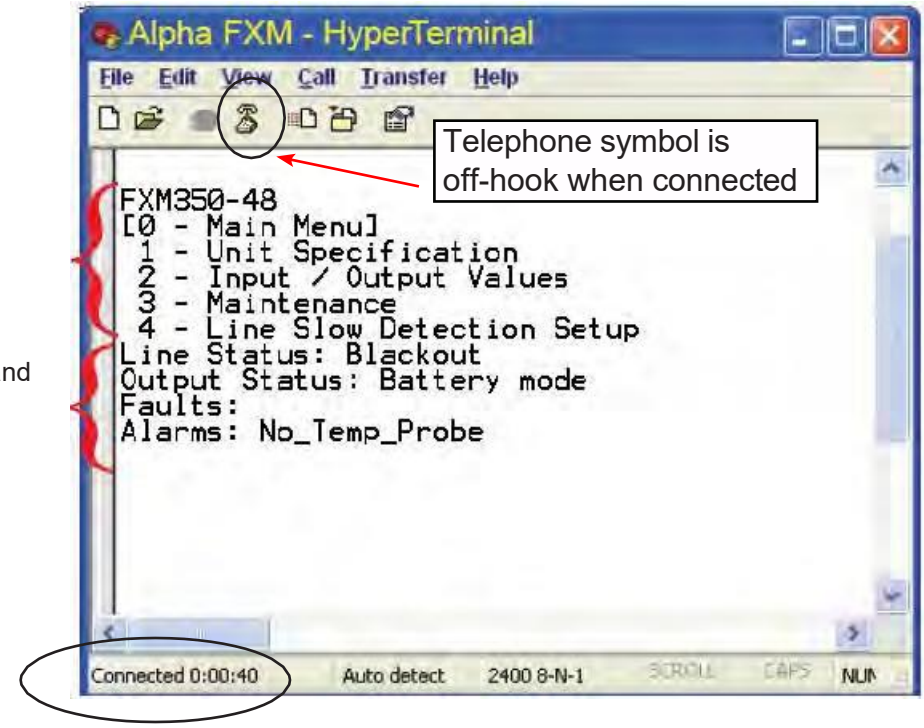

Figure 67 — Main Menu Screen

7.5.2.1 Main Menu Screen — Submenus

Submenus #1, 2 and 4 are read-only screens for monitoring the Alpha FXM. To control the Alpha FXM, use submenu #3, the Maintenance submenu.

0-Main Menu

1-Unit Specifications

- **Unit Model**
- **Input**
  - ***Voltage***
  - ***Frequency***
- **Output**
  - ***Voltage***
  - ***VA***
- **Battery**
  - ***Voltage***
- **Software**
  - ***Version***

2-Input/Output Values

- **Input**
  - ***Voltage***
  - ***Current***
  - ***Frequency***
- **Output1**
  - ***Voltage***
  - ***Current***
  - ***VA***
- **Output2**
  - ***Voltage***
  - ***Current***
  - ***VA***
- **Backfeed**
  - ***Voltage***
- **Battery**
  - ***Voltage***
  - ***Charging Voltage***
  - ***Temperature***
  - ***Internal Temperature***

3-Maintenance

- **30-Battery Test Options**
  - *300-Set Battery Test Period*
  - *301-Battery Test DOD*
- **31-Inverter On/Off**
  - *310-Set Inverter-Off Delay*
  - *311-Inverter On/Off*
- **32-Change Password**
- **34-Line Qualify Time**
  - *1) Set to 3 seconds (default)*
  - *2) Set to 10 seconds*
  - *3) Set to 20 seconds*
  - *4) Set to 30 seconds*
  - *5) Set to 40 seconds*
  - *6) Set to 50 seconds*
- **35-Low Battery Warning Voltage**
- **36-Load Shed Timer On/Off**
  - *1) Timer 1 on*
  - *2) Timer 1 off*
  - *3) Timer 2 on*
  - *4) Timer 2 off*
  - *5) Timer 3 on*
  - *6) Timer 3 off*

4-Line Slow Detection Setup

This read-only screen shows the Alpha FXM input voltage parameters. These values are factory set and cannot be changed in the field. See Specifications, "Boost/Buck/ Line Transfer Thresholds."

These 2 read-only screens show the Alpha FXM factory specifications or the present input and output measurements. The Input/Output Values submenu does not automatically update. For an updated value, type **2** and press **Enter**.

Press **Enter** to go up 1 level in the menu tree.

To reach any submenu, type in its number and press **Enter**.

To reach the main menu, type 0 and press **Enter**.

Figure 68 — Menu Tree

7.5.2.2 Main Menu Screen — Line Status

Line status line reports the line condition. For an updated value, press **Enter**.

Table E — Line Status (see Figure 67)	
Normal	The line is within specifications. See specifications, “Boost/Buck/Line Transfer Thresholds”. The Alpha FXM is operating in Line mode.
Boost	Line voltage is out of tolerance. The Alpha FXM is operating in Boost mode.
Buck	Line voltage is out of tolerance. The Alpha FXM is operating in Buck mode.
Blackout	The line is absent.
Freq low	Line frequency is too low.
Freq high	Line frequency is too high.

7.5.2.3 Main Menu Screen — Output Status

Output status line reports how the Alpha FXM is producing power. For an updated value, press **Enter**.

Table F — Output Status (see Figure 67)
Line mode
Battery mode
Battery mode, low bat. warning
Battery mode (testing battery)
Battery bypass mode
Boost mode
Boost 2 mode
Buck mode
Hot swap mode
Inverter off due to fault
Inverter off due to low battery
Inverter off at start-up
Shutdown due to user request

7.5.2.4 Main Menu Screen — Fault and Alarm Displays

Faults and alarms display on the main menu screen. See Chapter 9, Troubleshooting.

Table G — Faults (see Figure 67)	
Short_Circuit	The load has a short.
Vout_Hi	The output voltage is above specifications.
Batt_Hi	The batteries cannot be charged.
Batt_Lo	The batteries are almost discharged.
Vout_Lo	The output voltage is below specifications.
Overload	The Alpha FXM is overloaded. Remove excess loads.
Backfeed	A relay inside the Alpha FXM has failed and it cannot be replaced in the field. Contact Alpha and Outback Energy customer service department.
Bad_Battery	The battery voltage has dropped below a specified level. Inverter shuts down.
Temp_Hi	The Alpha FXM is operating above temperature range.

Table H — Alarms (see Figure 67)	
AC_Brkr_Open	The AC breaker is opened.
Batt_Brkr_Open	The battery breaker is opened.
Batt_Low	The battery voltage is low.
Fan_Fail	The Alpha FXM internal fan has failed.
Keep_Alive	The Alpha FXM keep alive feature failed to restore communication.
Line_Freq	The line frequency is outside of the Alpha FXM input specifications.
No_Temp_Probe	The battery temperature sensor has become disconnected or has failed.
Overload	The Alpha FXM is overloaded. Switch off excess loads.
Self_test	The Alpha FXM is performing self-test.
Temp_Hi	The ambient battery temperature is too high.
Temp_Lo	The ambient battery temperature is too low.
User_Input	The user input contact "User Input: S2" is shorted.
Weak_Battery	The battery has failed the background scan in Line mode.
Wrong_Software	The AOE UPS Monitor is invalid (either version or part number).

7.5.3 Adjusting and Controlling the Alpha FXM

Use submenu #3, the Maintenance submenu (Figure 67 and Figure 68) to control the Alpha FXM and change selected items to meet your operational needs.

7.5.3.1 From the Main menu, type 3 and press Enter.

Table I — Maintenance Submenu	
30 Battery Test Options	Starts the battery test and sets how long the test will run. The default setting for the test depth-of-discharge is 20%, but this can be adjusted from 0 to 100%. For a description of the battery test, see BATT TEST in Table B.
31 Inverter On/Off	Switches the inverter on or off to allow you to prevent a damaging deep battery discharge or to provide backup battery power to the load. For a description, see INVERTER in Table B. You can set a delay before the inverter switches off to allow time for switching off critical loads. The Set Inverter ON/OFF delay is only available when the Alpha FXM is in the Battery or Standby modes. The delay can be adjusted in 1 second steps with a default setting of 0 seconds to a maximum of 600 seconds (10 minutes). The delay is only available in the Standby or Battery modes. Once the Alpha FXM returns to the Line mode, the delay resets itself to 0 seconds.
32 Change Password	Changes the Alpha FXM password. The factory set password is 1111, which can only be changed when the Alpha FXM is in Line mode. The password is limited to 4 alpha- numeric characters in length.
34 Line Qualify Time	Let's you set the delay when the Alpha FXM goes from Battery mode to Line mode after the line becomes requalified. The purpose of this delay is to make sure the line is stable before the Alpha FXM switches back to it. For a description, see QUAL TIME in Table B. The default setting is 3 seconds, but you can set this to 3, 10, 20, 30, 40 or 50 seconds.
35 Low Battery Warning Voltage	Let's you set the Alpha FXM low battery warning voltage by typing in the % battery voltage level where you want the warning to be triggered. Adjust the setting to match the batteries you are using and the actual operating conditions. **48V**: Default 40% -47 VDC Adjusted in 1% increment – 0.05 VDC Minimum 0% - 45.0 Maximum 100% - 50.0 VDC **24V**: Default 40% - 23.5 VDC Adjusted in 1% increment – 0.025 VDC Minimum 0% - 22.5 VDC Maximum 100% - 24.8 VDC
36 Load Shed Timer On/Off	Let's you switch the timer contacts on or off. See "Contacts C1 to C2".in section 2.3.

7.5.4 Programming the Dry Contacts

The Alpha FXM front panel contacts (C1 and C2) can be programmed to meet your specifications. In addition, C3 to C5 are available with optional additional dry contacts as well as two optional user inputs 3 and 4. Each contact can only be programmed for one function at a time and cannot show multiple conditions.

The functions of dry contacts can be changed with HyperTerminal. For example, to change contact C2: To see how it is currently programmed, type **c2** (all lower case) and press **Enter**.

The Alpha FXM responds with ***c2=2** where the * shows the unit responded to your command. For example: a "**2**" shows it is programmed to be the **Low Battery** indicator as shown in Table J.

To change the contact, type **c2=X** where X is 1 to 14 and press **Enter**.

The Alpha FXM responds with ***c2=(1 to 14)**. For example, to change the C2 contact to be the Temperature indicator, type **c2=11**

Table J — Dry Contact Configuration Settings	
1= On Battery	Used for remote indication of the On Battery condition
2= Low Battery	Used for remote indication of the Low Battery condition
3= Timer 1	See "Setting the Timer Contact Interval" on page 76.
4= Alarm	Used for remote indication of an Alarm condition
5= Fault	Used for remote indication of a Fault condition
6= Disabled	Dry contact is disabled, i.e., never energizes
7= Timer 2	See "Setting the Timer Contact Interval" on page 76.
8= Timer 3	See "Setting the Timer Contact Interval" on page 76.
9= 48Vdc (Not available)	N/A
10= Generator	Reserved for future use
11= Temperature	See "Controlling the external fan by temperature triggered dry contact" on page 77.
12= Low Battery, Shutdown	Contact will activate when battery is low (factory-defined level) and the FXM is running in Inverter mode. Contact is deactivated when battery level returns to an acceptable value.
13= Low Battery and Line	Used for remote indication that the battery is low in Line mode. This condition can be used to interpret the health of the battery.
14= LVD (Low Voltage Disconnect)	The dry contact is energized when the battery voltage is greater than the DC CONNECT set voltage (see Table B) and will de-energize if the battery voltage drops below 42V for 48V system (21V for 24V system). The default reconnect voltage is set to 48VDC and can be adjusted up to 51VDC.

7.5.4.1 Setting the Timer Contact Interval

If you configure one of the dry contacts to act as a timer, the next step is to set the value of the timer.
Time can be entered in units of 0.5 second; e.g., 120 units of 0.5 seconds = 60 seconds. However, it is more intuitive to enter time in the hh:mm:ss format, such as 00:01:00 for 1 minute or 60 seconds. Both methods are shown in the following example.

Table K — Setting the Timer Contact

	Enter command	UPS display	Description
Displaying the Timer	**timer1** and press **Enter**	*timer1=02:00:00	Returns the value of Timer 1
	timer2 and press **Enter**	*timer2=02:00:00	Returns the value of Timer 2
	timer3 and press **Enter**	*timer3=02:00:00	Returns the value of Timer 3
Setting the Timer	**timer1=00:01:00** and press **Enter**	*timer1=00:01:00	Sets the value of Timer 1 to 60 seconds.
	timer1=120† and press **Enter**	*timer1=120	
	timer2=00:01:00 and press **Enter**	*timer2=00:01:00	Sets the value of Timer 2 to 60 seconds.
	timer2=120† and press **Enter**	*timer2=120	
	timer3=00:01:00 and press **Enter**	*timer3=00:01:00	Sets the value of Timer 3 to 60 seconds.
	timer3=120† and press **Enter**	*timer3=120	
	default and press **Enter**	*default	Resets the timer to the factory default of 02:00:00 (2 hours); and resets contacts C1 to C5 to the factory default settings.

Note: In the above example, the default timer setting of 2 hours is used.
*Indicates that the Alpha FXM has responded to the command you entered.
† Time can be entered in units of 0.5 second; e.g., 120 units of 0.5 seconds = 60 seconds. However, it is more intuitive to enter time in the hh:mm:ss format, such as 00:01:00 for 1 minute or 60 seconds in the above example.

7.5.4.2 Controlling the external fan by temperature triggered dry contact

The Temperature trigger has a user configurable range of +20°C to +55°C (68 – 131 °F). When the battery temperature (monitored by the Battery Temperature Probe) reaches the threshold, the assigned relay closes and turns on the external fan.

1. Assign the Temperature trigger function to an available dry contact, (for example, **c2=11**, where 11 is the assigned index for the Temperature trigger function.)
2. At the HyperTerminal screen prompt, type **Temp** and press Enter to display the current temperature setting. For example, the Alpha FXM might return ***temp=20**.
3. To change the value to +35°C, type **temp=35** and press Enter. The Alpha FXM returns ***temp=35** as confirmation.

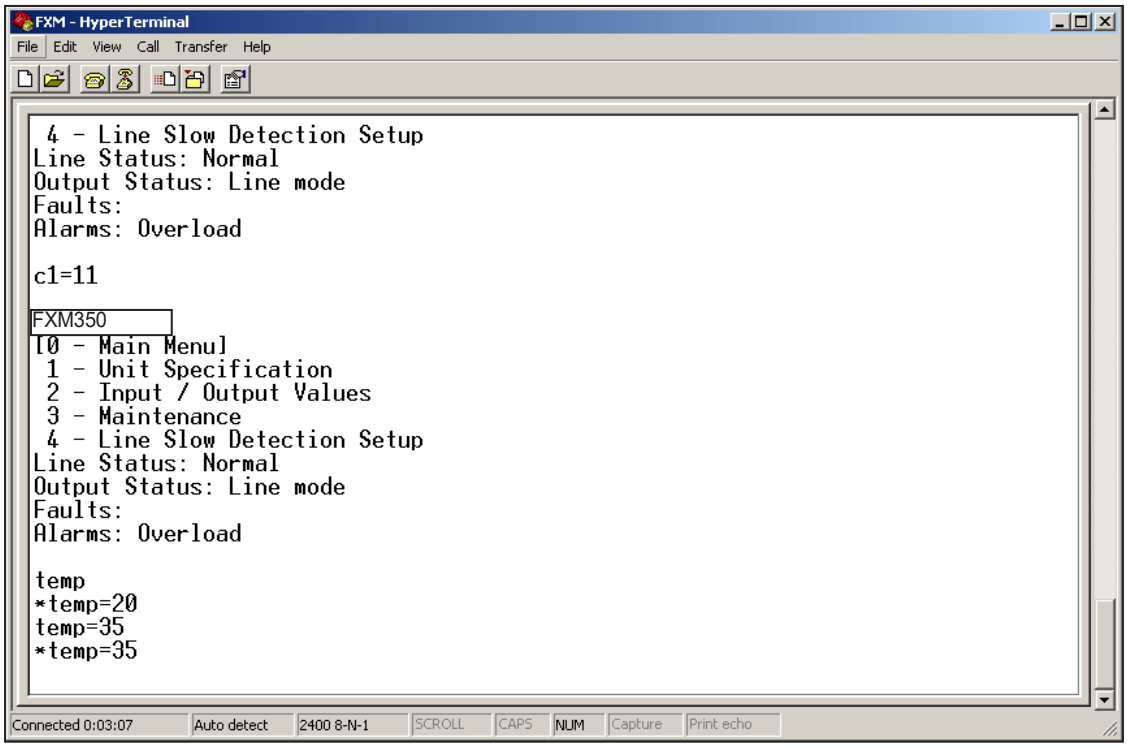

Figure 69 — Temperature trigger function via HyperTerminal

7.5.4.3 Resetting the Dry Contact Settings

To reset the dry contact settings to the factory default, type **default** and press **Enter**. The Alpha FXM responds with ***default**, showing it is reset. This command also resets the timer setting to the 2 hours factory default. See Table R for the factory default settings of dry contacts.

7.5.5 Setting the Date and Time

Table L — Setting the Date and Time		
Enter command	**UPS display**	**Description**
clock and press **Enter**	*clock=12/31/07 22:00:00	Returns the current date and time.
clock= 010111 ␣ 120000 and press **Enter**	*clock=01/01/11 12:00:00†	Sets the date and time to Jan 01, 2011, 12:00 pm

Notes:

1. Time is displayed in the 24 hours clock format.
2. Changing the mm/dd/yy format with DATE SEL on the LCD Control menu does not change the USB mm/dd/yy format.
3. If the Alpha FXM has been in storage or switched off for a prolonged period, the backup Lithium coin battery could be drained and may not correctly keep a backup of the date and time you entered. After switching on the Alpha FXM check the date and time settings. The Alpha FXM should display the current date and time. If it displays the date as "00:01:00", then the battery is spent and you need to ask a qualified service personnel to replace the lithium coin battery. See "Troubleshooting" on page 88.

*Indicates that the Alpha FXM has responded to the command you entered.

† If the date or time change is invalid, the Alpha FXM will return the time and date it was set to before you tried making the change. The date and time must be entered as one complete line command. You cannot change only the time or the date alone. Both must be set at the same time. If you make a mistake, press Enter and try again.

7.5.6 Viewing the Serial Number

To display the serial number of the Alpha FXM UPS, type "∗QY0" at the command line and press "Enter".

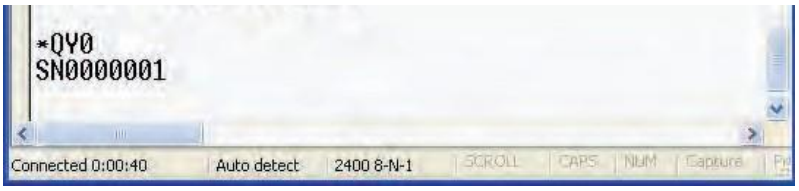

7.5.7 Setting the Peukert Number and Capacity

You can set the Peukert Number and Capacity using the USBinterface or the web interface. To display the current Peukert Number, type "∗QY6" at the command line and press "Enter".

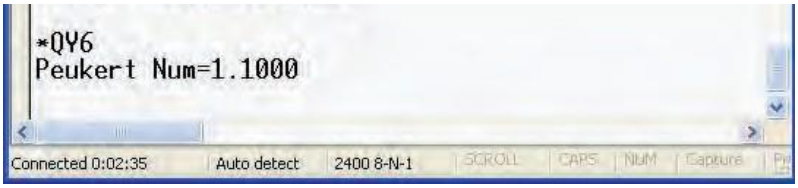

To change the Peukert Number to 1.1345, type "∗ST6:1.1345" at the command line and press "Enter".

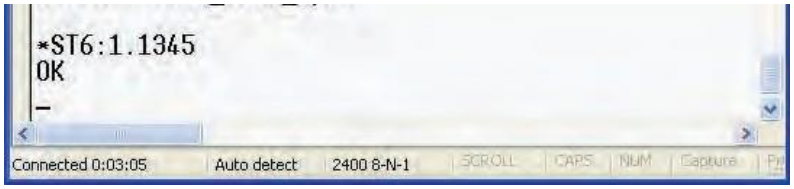

To display the current Peukert Capacity, type "*QY7" at the command line and press "Enter".

To change the Peukert Capacity to 109.123, type "*ST7:109.123" at the command line and press "Enter".

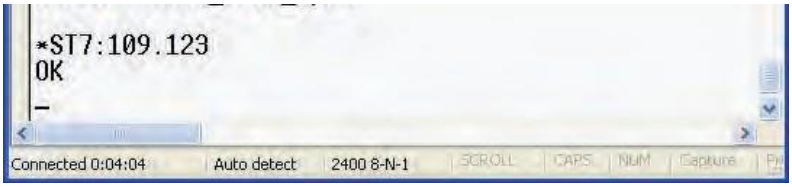

To determine the Peukert number and capacity of your battery, refer to "Appendix A - Puekert Number and Battery Capacity" on page 95.

7.5.8 200-event Log

Up to 200 events are stored in the Alpha FXM log. If more than 200 events occur, the oldest is over-written.

7.5.8.1 Procedure

1. To see the log, type **event** (all lower case) and press **Enter**. The events are listed starting with the most recent and appear as:

eventX=12/25/99 01:45:59 0000000000000000, 0000000000000000, 000

Event *Date* *Time* *Alarm* *Fault* *Mode*

Date & Time formats depend on selected display format

See below for details on these readouts.

Alarm: When the following bits show a 1, the following alarms are displayed.

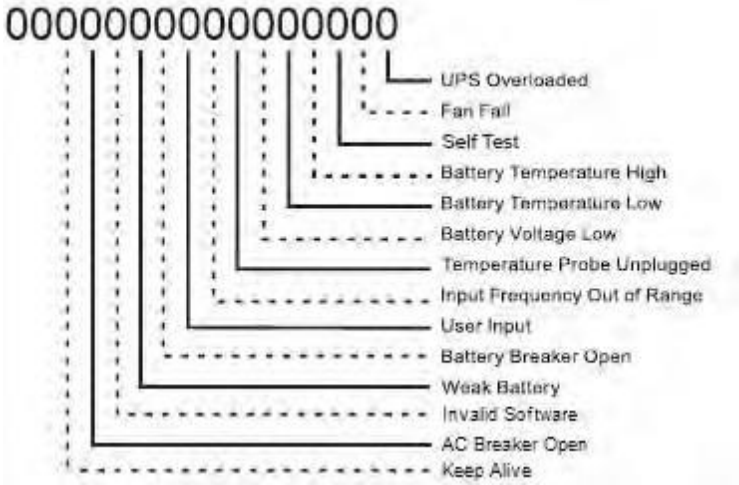

Fault: When the following bits show a 1, the following faults are displayed.

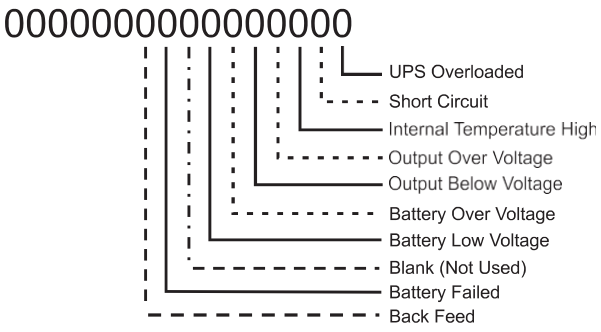

Table M — Event Codes					
Code	**Mode**	**Code**	**Mode**	**Code**	**Mode**
000	Standby	003	Boost 1	006	Inverter
001	Line	004	Buck 1	009	Shutdown
002	Boost 2	005	Buck 2	010	Bypass

2. If less than 200 events occurred, the last entry will appear as:

eventX=00/00/00 00:00:00 0000000000000000, 0000000000000000, 000

3. To clear the log, type **eventclr** and press **Enter**. It takes the Alpha FXM 30 seconds to clear the log. Do not enter any other commands during this time.
4. To see a specific event, type **eventX** where X is from 1 to 200 and press **Enter**. To see a range of events (for example, events 20 to 30), type **eventX-X** where X are events from 1 to 200 and press **Enter**. To clear the log, type **eventclr** and press **Enter**. It takes the Alpha FXM 30 seconds to clear the log. Do not enter any other commands during this time.
5. To see a specific event, type **eventX** where X is from 1 to 200 and press **Enter**. To see a range of events (for example, events 20 to 30), type **eventX-X** where X are events from 1 to 200 and press **Enter**.

7.5.9 Restoring All Parameters to Default Values

The purpose of this command is to reset the Alpha FXM to the factory default state. See Table D for a list of parameters that will be restored to their default values.

CAUTION

This command resets all parameters that are user-configurable. All previously programmed operation will be lost. Implement a backup plan for mission critical operations. This command is password protected.

7.5.9.1 Procedure

- Type **default:all** and **press Enter**.
- **Enter the password and the** Alpha FXM returns ***default** as confirmation.

8. Maintenance

8.1 Updating the Software

The Alpha FXM firmware can be reinstalled or updated to the latest version with this procedure.
If your Alpha FXM is provided with the factory-installed FXM communication module, the firmware upgrade can be done via an intranet or internet connection.
You will need the following items:

- USB connection cable to the Alpha FXM
- **uBug12** software must be installed. It is available for download at www.alpha.ca\downloads.

Note: When installing uBug 12, a warning notification may appear: **Tera Term Pro not installed**. Click **OK**. Tera Term Pro is not used.

- Alpha's firmware must be installed. It can be accessed with your computer and downloaded at www.alpha.ca\downloads.

8.1.1 Procedure

1. Switch off the Alpha FXM.
2. Connect the USB cable if it is not already connected.
3. While pressing and holding the **SELECT** button, switch on the battery circuit breaker. The LCD panel shows "**Alpha XP ISP**".

Alpha XP ISP
V0.0.0.1

4. Start **uBug12**.
5. Type (all lower case) **con** (1 space)**1**(or the number of the computer's comm port you are using) and press **ENTER**. The screen shows "connected" when the connection is established.

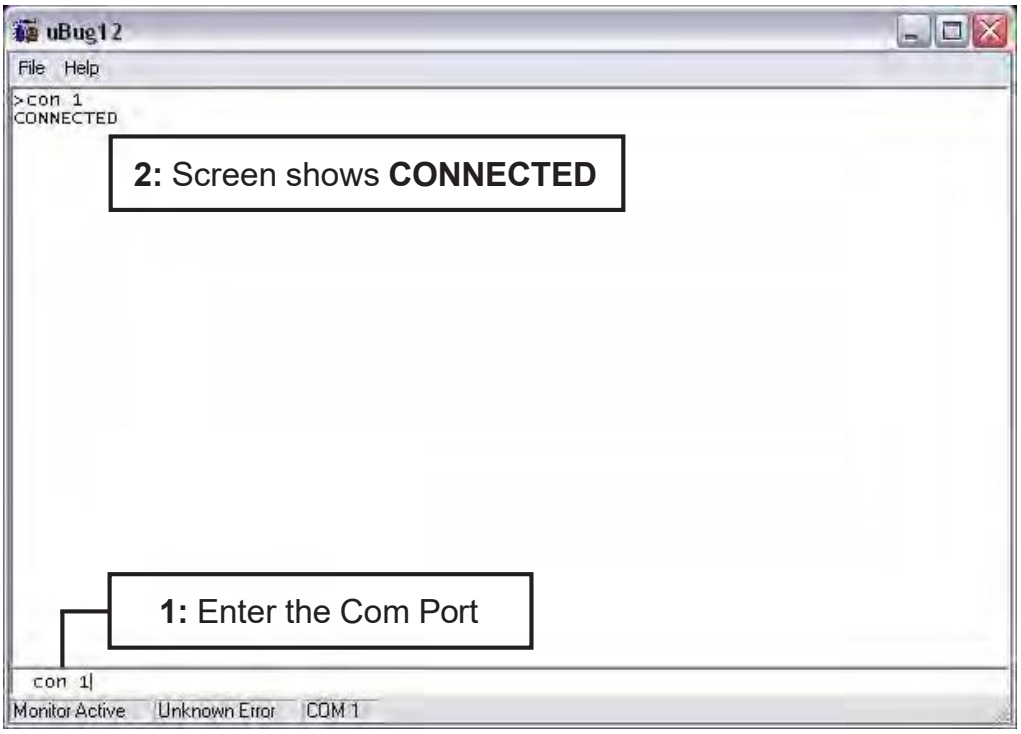

6. In the **uBug12** screen, type (all lower case) **fbulk** and press **ENTER**. The erasing pop-up appears. It disappears when the Alpha FXM memory is erased. If an error message appears, send the **fbulk** command again.

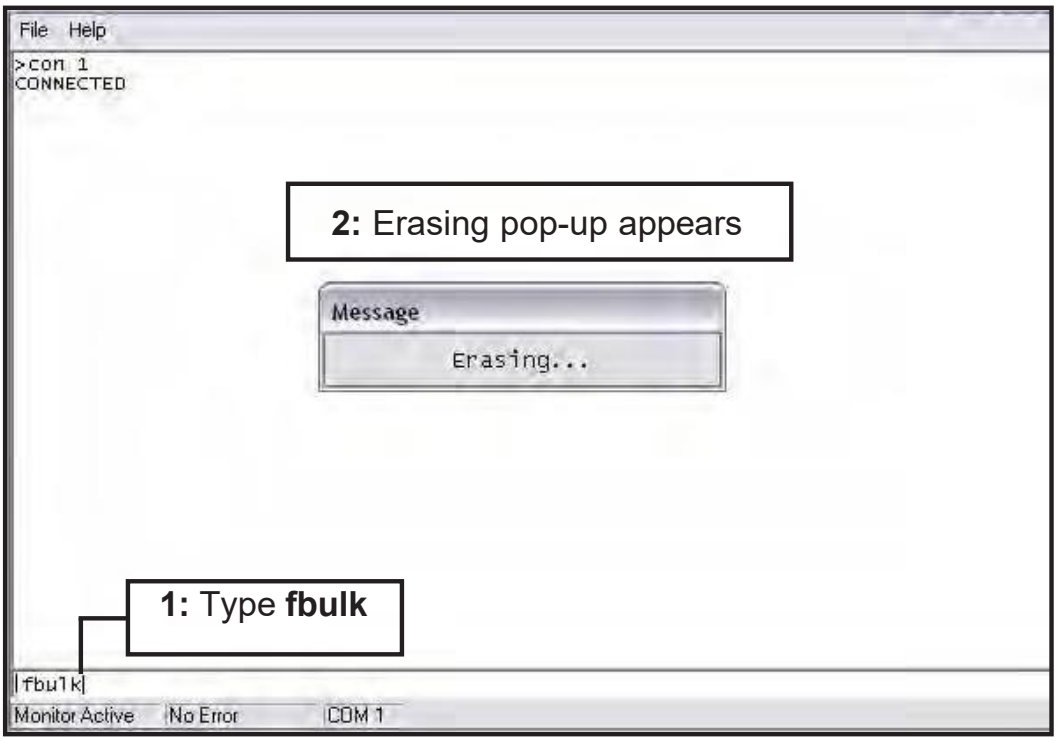

7. In the **uBug12** screen, type (all lower case) **fload** (1 space)**; b** and press **ENTER**. A pop-up appears asking you to locate the new firmware. Look for a.**sx** record (***.sx**). Select this new firmware. The **fload** pop-up appears.

8. When the software has finished loading into the Alpha FXM, a pop-up shows "**Loaded OK in (xx) seconds.**" If an error message appears, switch off the Alpha FXM and start over. It should not take more than one or two restarts to load the software. If the problem persists, contact AOE technical support.

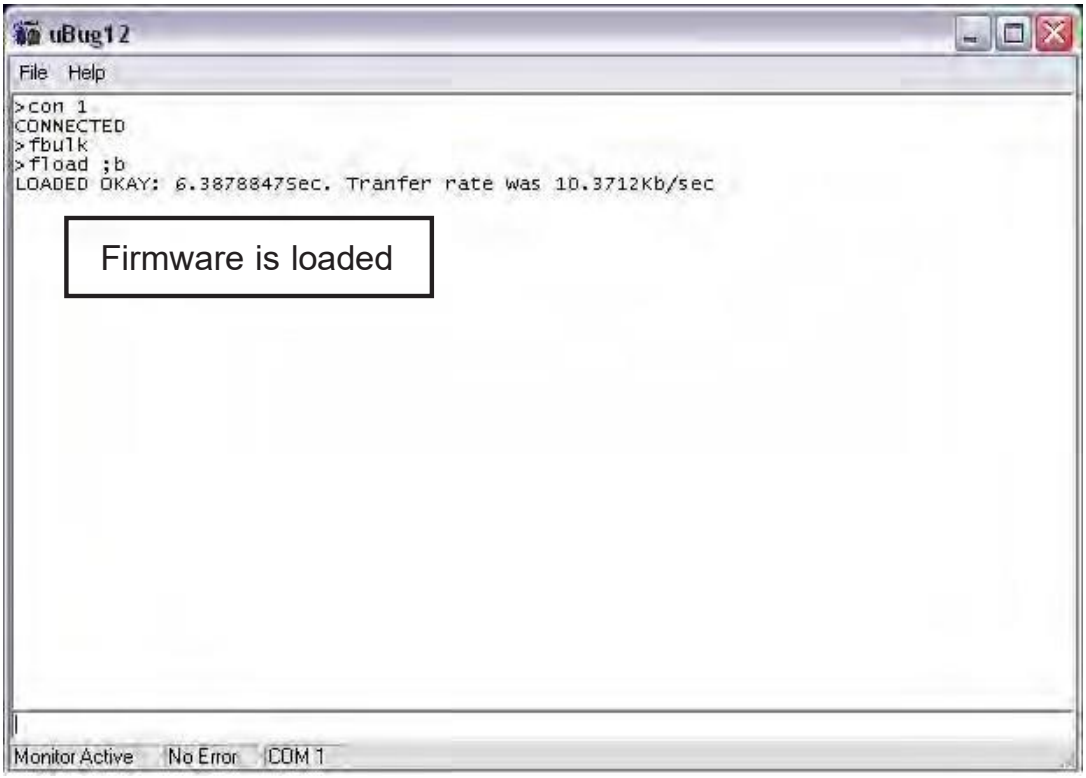

9. Type (all lower case) **exit** and press **ENTER**. The **uBug12** screen disappears.
10. Switch off the battery breaker.
11. To check if the installation was successful, switch on the battery breaker. The LCD logo screen should appear as follows. If it shows **Alpha XP ISP** as shown in Step 3, try installing the firmware again.

Alpha	**120/60/N**
FXM	**LINE**

8.2 Testing and Replacing the Batteries

8.2.1 Battery Life

Batteries lose their ability to store power as they age. Regularly test the batteries to ensure that they can continue providing reliable service. Battery life is reduced by three major factors:

- Temperature – higher ambient temperatures, especially above 25°C (77°F), will reduce battery life. For example, an average operating temperature of 27°C (81°F) will likely reduce the life of the battery by 25%. Ensure that the Alpha FXM and batteries are situated in a well-ventilated area with adequate temperature control. A cool environment is preferable.
- Number of discharge cycles – the more frequent the batteries are discharged, the shorter the battery life. Frequent power outages imply the need for more frequent battery replacement.
- Depth of discharge – the longer the batteries are required to provide back-up power, the shorter the battery life. Frequent full discharging and the associated recharging of the batteries reduces the life. Shut down the electrical load or return to primary power as soon as possible to extend the battery life.

8.2.2 Battery Run Time

The chart below shows typical run times (time to full discharge) for the standard batteries supplied with this unit. These runtimes are for batteries in new and good condition. The run time performance will deteriorate over time in a progressively decreasing curve.

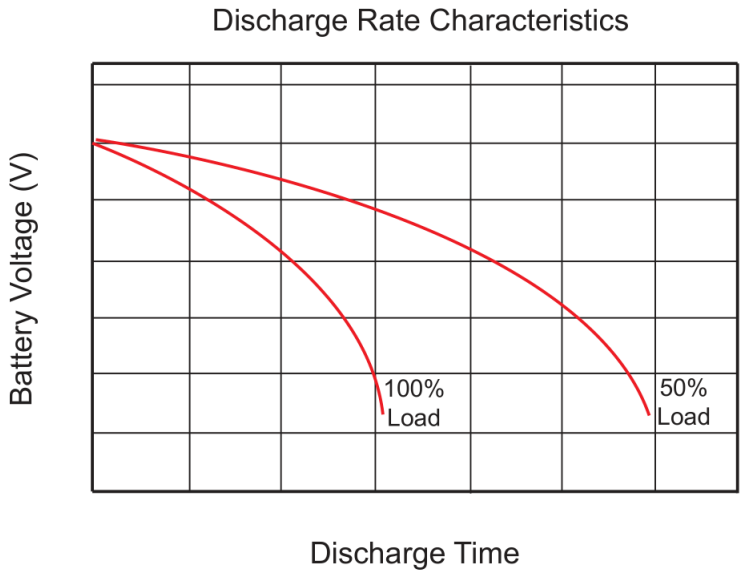

Figure 70 — Typical Discharge Characteristics for Lead Acid Batteries

8.2.3 Battery Maintenance

The batteries supplied with this unit are sealed and maintenance free. Regularly ensure that all connectors are tight and free of corrosion. The presence of corrosion, swelling of the battery case, or distortion in the shape of the case suggests that the batteries need to be replaced.

8.2.4 Battery Conductance Test (Optional)

1. Place the conductance meter probes across Battery #1.
2. Record the voltage and Siemens values in a log book.
3. Repeat for batteries #2, #3 and #4.

A new AlphaCell 180GXL battery has a conductance reference value of 1100 Siemens at 25°C (77°F). When this value drops to 550 Siemens or 50% of the new battery reference value, the battery capacity is suspect of being below 80% and should be evaluated further. When the temperature of the batteries is not between 20°C and 30°C, use the following temperature compensation values.

Table N — Battery Temperature Compensation Values

Battery Temperature	Reference Value New 180GXL	Suspect Value
35°C or higher	1183	592
30°C	1140	570
25°C	1100	550
20°C	1063	532
15°C	1028	514
10°C	995	498
5°C	965	483
0°C or colder	936	468

8.2.5 Replacing the Batteries

Replace the batteries according to the results of the self-test or the presence of terminal corrosion, swelling of the battery case, or distortion in the shape of the case. New batteries will normally provide longer run times than older ones. Larger capacity batteries may be available. Contact AOE Technical Support (1 888 462 7487) to order replacement batteries or to obtain assistance. On-site service may be available in your area.

8.2.5.1 Tools and Materials Required

- AC/DC voltmeter or multimeter.
- Labels or masking tape and marker.
- Torque wrench.
- Slot head screwdriver to fit the terminal blocks.
- High strength, flame-proof tape such as duct tape.
- Battery terminal corrosion inhibitor (such as NOCO Company's NCP-2 or Sanchem Inc.'s No-Ox ID Grease "A").

WARNING!

Read and understand the battery safety instructions in "Product Safety Information".

CAUTION

Make sure all the replacement batteries are of the same type and rating. Failure to do so could result in improper charging and damage to the batteries.

The Alpha FXM cannot provide backup battery power while the batteries are being replaced. If the line becomes unqualified while the batteries are being replaced, the Alpha FXM shuts down and no power is provided to the load.

8.2.5.2 Procedure

1. The Alpha FXM must be in the Line state. If it isn't, wait until the line is qualified before proceeding.
2. Switch the Alpha FXM into the Bypass State by doing one of the following:

   - From the Alpha FXM control panel, navigate to the **UPS Control Menu > INV BYPASS**. Press the **SELECT** button once OFF is flashing. Press the **SCROLL** button once ON is flashing. Press the **SELECT** button once ON is displayed continuously, indicating that the Alpha FXM has been switched into the Bypass state.

     OR

   - From the AOE UPS Monitor main screen, go to the **UPS Maintenance > Unit Configuration** screen. Switch on the **Bypass Mode** by clicking the **ON** button and then the **Update Configuration** button. The Alpha FXM responds by displaying a "Bypass State" alarm. This is normal and does not indicate a problem. It will clear itself when the Bypass state is subsequently disabled.

3. Switch off the battery circuit breaker.
4. Replace the batteries.
5. Switch on the battery circuit breaker.
6. Switch the Alpha FXM out of the Bypass state by switching the **Bypass Mode** OFF.

8.3 Preventive Maintenance

Perform preventive maintenance on the Alpha FXM module every 6 to 12 months. For mission critical applications such as backup for traffic intersections, more frequent maintenance should be done. Proper implementation of the following procedure will ensure that your system continues to provide reliable backup power in the event of a utility power failure.

8.3.1 Tools and Materials Required

- Wrench set
- Labels and marker to number batteries
- Conductance meter for optional conductance test

8.3.2 Procedure

1. Inspect the Alpha FXM and wiring for any physical damage. Repair or replace as required.
2. Verify that all connections are securely fastened. Tighten if necessary.
3. Inspect the batteries for cracks or swelling. Replace all four batteries if any of the batteries are cracked or swollen. Replace only a faulty battery if an Alphaguard battery balancer is installed.
4. Inspect the battery terminals for corrosions. Clean and apply a corrosion prevention compound such as NOCO Company NCP-2 or Sanchem Inc. NO-OX-ID if required.
5. Re-tighten the battery terminal bolts on Insert Terminal batteries. Re-torque the battery terminal bolts on Flag Terminal batteries to the manufacturers specifications on if required.
6. Label the batteries #1, #2, #3 and #4. The battery negative cable from the Alpha FXM is connected to Battery #1, and the battery positive cable from the Alpha FXM is connected to Battery #4.
7. Verify that the battery temperature probe is securely taped to the side of either battery #2 or #3.

8.3.3 Battery Test

1. Activate the Alpha FXM self-test function.
2. After passing the self-test, disconnect the AC input to the Alpha FXM to trigger the Alpha FXM into the backup (Inverter) mode.
3. Let the Alpha FXM operate in the backup mode for approximately 10 minutes.
4. Measure the individual battery voltages while the Alpha FXM is operating in the backup mode. There should be no more than 0.6 volts difference between the highest battery voltage and the lowest battery voltage.

CAUTION

A battery that measures 2 V lower than the other three batteries in the string probably has a shorted cell. Replace all four batteries.

Three batteries in the string measuring the same voltage and one battery measuring several volts higher indicates an open cell in the battery with the higher reading. Replace all four batteries.

5. Verify that there is no Low Battery Alarm.
6. Reconnect the AC input.

9. Troubleshooting

When the front panel alarm LED is illuminated or flashing, the Alpha FXM has a malfunction:

- Red LED solidly illuminated indicates a fault in the Alpha FXM. (See Table P.)
- Red LED flashing indicates an alarm. (See Table O.) The web interface can also be used for troubleshooting.

9.1 Procedure

1. Press the **SELECT** button.
2. The LCD may display one or more of the conditions in Table O.
3. Press the **SCROLL** button to see if more than one malfunction is present.
4. To clear the malfunction from the screen, press and hold the **SELECT** button for 5 seconds.

Table O — Alarm Submenu

LCD Shows	Problem Description	What To Do
Over Load	The Alpha FXM is overloaded.	Remove excess loads.
Batt Temp High	The battery temperature is above the specification limit.	If used, ensure that the battery fan is working. Contact AOE Technical Support to purchase an upgrade if required.
Batt Temp Low	The battery temperature is below the specification limit.	Use optional battery heating mats or heater. Contact AOE technical support to place the order.
Batt Low Warning	The batteries are almost discharged. Also see “Adjusting and Controlling the Alpha FXM, #35: Low Battery Warning Voltage”.	Check that the DC breaker is closed. Ensure that the Alpha FXM charger is working. If the charging voltage is low, the battery may need to be replaced.
FAN Alarm	The fan has failed.	Contact AOE technical support. The fan is not a replaceable part.
Temp Probe Unplug	The temperature probe is unplugged.	Plug it back into the Alpha FXM or change the probe.
User Input Alarm	When the user input is shorted. See “User Input: S2”.	Check the user input parameters.
In Freq Out of Range	The line frequency is outside of the Alpha FXM allowable range. The Alpha FXM goes into Inverter mode.	Info only.
Weak Battery	The battery is being monitored continuously in the background in Line mode. This alarm is issued if the battery did not pass the background scan.	Check the battery life and replace the battery if necessary.
Battery Test	The Alpha FXM is performing a battery test.	Info only.
Invalid Software	The FXM software is invalid (either version or part number.	Contact Alpha technical support.
Keep Alive Failure	The Alpha FXM failed to restore communication by resetting power using keep alive feature.	Turning off keep the alive feature will clear the alarm.

Table P — Fault Submenu		
LCD Shows	**Problem Description**	**What To Do**
Overload Fault	The load draws more power than the Alpha FXM can provide. This can lead to an automatic Alpha FXM shutdown.	Remove excess loads.
Short Circuit	The load has a short.	Check the output. Remove the faulty load if necessary.
Intl Temp Fault	The Alpha FXM internal temperature is too high and could cause an automatic Alpha FXM shutdown.	Verify that the fan is not blocked and that it is working by performing a battery test. Also See Fan Fail Alarm.
Output Over Voltage **Output Voltage Low**	The output voltage is above or below the Alpha FXM specifications.	Info only.
Battery Fail	In Inverter mode, the battery voltage has dropped below a specified level. This fault is triggered and the inverter shuts down. This fault is also known as a Low Battery Shutdown or Bad Battery.	Info only. The Alpha FXM will recharge the battery when the Alpha FXM requalifies the line.
Backfeed	A relay inside the Alpha FXM has failed. It cannot be fixed in the field.	**DANGER:** Do NOT touch the AC input terminals. Contact AOE Technical Support.
Battery Over Voltage	Battery voltage is abnormally high.	Check the voltage at the battery voltage test points. Ensure that the battery is in good working condition. Replace the battery if necessary.
Batt Volt Low	Battery voltage is low and is close to the self-kill level.	Ensure that the Alpha FXM charger is working. If the charging voltage is low, the battery may need to be replaced.

Table Q — Problems Not Reported by System		
LCD Shows	**Problem Description**	**What To Do**
No LCD display even when the Alpha FXM is powered on	The LCD may not function below -15ºC. This does not affect the normal operation of the Alpha FXM	Bring the operating temperature above -15ºC and the LCD display will gradually resume operation.
Date and time reset to 00:01:00 and 00:00:00	The backup lithium coin battery may need to be replaced. This is possible if the Alpha FXM has been in storage or switched off for a prolonged period. The average operating life of the lithium coin battery is about 5 years.	Replace the lithium coin battery. **Caution**: This must be performed by a qualified service personnel. Dispose of used batteries according to your local laws and jurisdictions.

10. Specifications

Table R — Mechanical Specifications		
Parameter	**Value**	
Dimensions H x W x D in (mm)	FXM350: 5.22 (133) x 15.5 (394) x 8.75 (222) Micro350 Std: 19.7 (500) x 14.1 (358) x 11.6 (294) Micro350 XL: 30.6 (776) x 14.1 (358) x 11.6 (294) Micro350 XL3: 52.4 (1330) x 14.1 (358) x 11.6 (294)	
Weight without batteries lb (kg)	FXM350: 19 (8.62) Micro350 Std: 43.4 (19.7) Micro350 XL: 49.8 (22.6) Micro350 XL3: 69.2 (31.4)	
Colour	Micro350 cabinet white, FXM 350 black	
Mounting	Micro350: Pole or pedestal FXM350: 19" or 23 " rack with the addition of ears for rack mounting	
Humidity	Operating (non-condensing): Up to 95% Storage: Up to 95%	
Cooling	Method of cooling: forced convection (fan cooled) Maximum heat release FXM350 and Micro350 (XL/XL3): Normal Mode: 9 W (30.7 BTU/ hr) Backup Mode: 110 W (375 BTU/ hr)	
Sound power level	LWAd = 45 dBA with fan at maximum speed (@25ºC, 1 meter from the unit)	
Temperature Range[1, 2]		FXM350 / Micro350
	Operating:	-40 to 55 °C (-40 to 131 °F) / -40 to 50 °C (-40 to 122 °F)
	Storage:	-40 to 75 °C (-40 to 167 °F) / -40 to 75 °C (-40 to 167 °F)
Altitude, m (ft)	Operating: Up to 3700 [3] (12,000) Storage: Up to 4600 (15,000)	
AC input and output connectors	Terminal block, Waco p/n 324-HDS/03 or equivalent (max 10 AWG)	
Dry contact connectors	Terminal block, mating plug JITE p/n PTB750B-03-1-03-3 or equivalent (max 16 AWG)	
Ethernet connector	Optional, factory installed RJ-45	
Dry contacts	2 sets of single-pole, double-throw relays located on the front panel. They are rated at 250 Vac, 1A. The factory default settings are: C1: On Battery. C2, Low Battery.	
User inputs	Two optically-isolated and powered inputs are located on the front panel. When they are shorted, their functions are: S1: Starts the self-test. S2: Activates an alarm.	
User interface[4]	2 x 20 backlit alpha-numeric LCD screen. Three control buttons located below.	

Table S — Electrical Specifications	
Parameter	**Value**
INPUT	
Voltage (nominal), Vac	120 or 230
Frequency, Hz, ± 5%	60/50 (auto-detection), Output frequency = Input frequency
Current, Amps (@ nominal Vin and max battery charging current)	FXM 350-24: 5.3 / 2.7 @120/230 Vac FXM 350-48: 5.7 / 2.9 @120/230 Vac
AC Input Circuit Breaker Ratings, Amps	FXM 350-24: 7 / 3.5 @120/230 Vac FXM 350-48: 7 / 3.5 @120/230 Vac
Battery Circuit Breaker Ratings, Amps	FXM 350-48: 15 FXM 350-24: 30
OUTPUT	
Voltage (nominal), Vac	120 or 230 and 24 Vac
Frequency, Hz, ± 5%	60/50 (output frequency = input frequency)
Power, W/VA	350 Total 24 Vac: 260 VA (max) 120 Vac: 350 VA (max)
Waveform	Pure sine wave
Load Crest Factor	3:1 (load dependent)
Output Voltage Distortion	< 3% THD (resistive load)
Efficiency [5] **Normal Mode Backup (Inverter) Mode**	> 96% > 82% (48 Vbatt), >75% (24 Vbatt)
Transfer Time, mS AVR to Backup Backup to AVR	5 (typical) 5 (typical)
Line Qualification Time, Seconds	3 (factory default), user adjustable to 3, 10, 20, 30, 40, or 50
Battery String Voltage	FXM 350 - 24: 24 VDC FXM 350 - 48: 48 VDC
Battery Charger Current,	FXM 350 – 24: 6A default user adjustable (0~6A) FXM 350 – 48: 4A default user adjustable (0~4A)
Battery Charger Temperature Compensation [6]	-5 mV/°C/Cell (factory default), user adjustable to -2.5, -4, -5 or -6 mV/°C/Cell
Battery type	Anderson Power mating part PP45 or equivalent

1. Capable of operating at 73% of rated full load for up to 2 hours at 74°C. For FXM350, above 55°C ambient, derate output power by 1.4% per °C rise, up to 74°C max. For Micro350 derate above 50°C
2. Capable of operating at 100% of rated full load below 0°C down to -40°C after the Alpha FXM350 and Micro350 has been stabilized at 0°C for at least 1 hour. Batteries may need battery heater mat at lower temperatures.
3. Derate 2°C per 300 m (1000 ft) above 1400 m (4500 ft).
4. The LCD display may not function below -15°C. It gradually resumes normal operation as the temperature rises above -15°C. This will not affect the operation of the Alpha FXM.
5. Efficiency is measured at an ambient temperature of 25°C, full resistive condition and nominal Line and Battery voltage.

Table T — Boost/Buck/Line Transfer Thresholds		
Parameter	Value	
	120 Vac Units	230 Vac Units
High Line Transfer High Line Retransfer	152 Vac 146 Vac	282 Vac 272 Vac
Buck 1 Transfer Buck 1 Retransfer	134 Vac 128 Vac	250 Vac 236 Vac
Boost 1 Retransfer Boost 1 Transfer	116 Vac 112 Vac	210 Vac 207 Vac
Boost 2 Retransfer Boost 2 Transfer	102 Vac 98 Vac	180 Vac 176 Vac
Low Line Retransfer Low Line Transfer	97 Vac 88 Vac	162 Vac 151 Vac

Table U — Regulatory	
Parameter	Value
Electrical Safety	UL 1778, CSA 107.3, EN 62040-1-2, EN60950-1.
Emission	FCC Part 15, Subpart B, Class A, CSPR22, EN55022 Level A.
Marks	C CSA US, CE (230 Vac versions only).
Packaging	Designed to meet requirements for ISTA program.

11. Warranty

Alpha and Outback Energy GmbH warrants all equipment manufactured by it to be free from defects in parts and labor, for a period of two years from the date of shipment from the factory. The warranty provides for repairing, replacing or issuing credit (at AOE's discretion) for any equipment manufactured by it and returned by the customer to the factory or other authorized location during the warranty period. There are limitations to this warranty coverage.
The warranty does not provide to the customer or other parties any remedies other than the above. It does not provide coverage for any loss of profits, loss of use, costs for removal or installation
of defective equipment, damages or consequential damages based upon equipment failure during or after the warranty period. No other obligations are expressed or implied. Warranty also does not cover damage or equipment failure due to cause(s external to the unit including, but not limited to, environmental conditions, water damage, power surges or any other external influence.
The customer is responsible for all shipping and handling charges. Where products are covered under warranty AOE will pay the cost of shipping the repaired or replacement unit back to the customer.

11.1 Battery Warranty

Note that battery warranty terms and conditions vary by battery and by intended use. The most common battery warranty provided by AOE is a two-year full replacement warranty with a pro-rated warranty for the following three years. Pro-rated warranty provides a credit applicable toward the purchase of new batteries from AOE. The credit is calculated as the purchase price multiplied by the percentage of the battery life that was not available (in months). Battery warranty coverage is lost where the battery charge is not maintained for 6 months. Contact your AOE sales representative or the Technical Support team at the above number to understand your entitlements under Battery Warranty.

12. Emergency Shutdown Procedure

The Alpha FXM UPS contains more than one live circuit. In an emergency, line power may be disconnected at the UPS's input, but AC power can still be present at the output.

1. Switch OFF the input circuit breaker.
2. Switch OFF the battery circuit breaker.
3. Disconnect the AC input power.
4. Disconnect the battery string.

Complete the following for your records:

Serial # _____
Options _____
Purchase Date _____

This unit was purchased from:

Dealer _____
City _____
State/Province _____
Zip/Postal Code _____
Country _____
Fax # _____
Telephone # _____
E Mail Address _____

Appendix A - Puekert Number and Battery Capacity

A.1 Introduction

The Alpha FXM series UPS units run on batteries when the AC utility power fails. In this mode, the user may want to estimate the remaining time that UPS batteries can supply power to the loads.

The battery run time remaining is calculated based on the Peukert equation. Two critical parameters are required for the equation:

- Peukert number.
- Peukert capacity.

The Peukert number and Peukert capacity depend on the battery characteristics. This document describes the procedures to determine the Peukert number, and Peukert capacity for the selected battery.

Once the Peukert's number and capacity are determined, enter these values in the GUI or web interface. The FXM will report the remaining battery run time.

The Peukert's equation and the remaining battery run time are estimates only. The actual run time may vary based on various parameters like the age and status of the batteries etc.

A.2 Determining the Peukert's Number and Peukert's Capacity

1. Obtain the data sheet of the selected battery.
2. Calculate the nominal load current for the application.

Example: If the load is 150 W and the battery string is 24 VDC, the load current is calculated as 150 W / 24 V = 6.25 A.

3. Find the current discharge ratings table in the data sheet. From the table, pick two current discharge values (I1 and I2) that are closest to the calculated load current and look up the two discharge hours (R1 and R2).
4. Use the following formula to calculate Peukert's number and capacity:

$$\text{Peukert's number} = n = \frac{\text{Log}\,(R_2/R_1)}{(\text{Log}\,(I_1) - \text{Log}\,(I_2))} \quad \text{..... (1)}$$

$$\text{Peukert's capacity} = (I_1)^n \times R_1 \quad \text{per battery} \quad \text{..... (2)}$$

A.3 Determining Peukert's Capacity for Series Parallel Combinations

1. For batteries connected in series, the Peukert's capacity for the battery bank is given by the equation:

$$\text{Peukert's capacity}_{\text{Battery bank}} = \text{Peukert's capacity}_{\text{per battery}} \ \text{Ah}$$
(as calculated in equation (2))

2. For batteries connected in parallel, the Peukert's capacity for the battery bank is given by the equation:

$$\text{Peukert's capacity}_{\text{Battery bank}} = \text{Peukert's capacity}_{\text{per battery}} \times N \ \text{Ah}$$
(where N = number of batteries in parallel)

A.4 Example

The following example shows how to calculate Peukert's number and capacity from a configured battery string. Consider four Alpha 180GXL batteries connected and configured as shown in the figure below. Two of the four batteries are connected in series, and the two series strings are connected in parallel to the 24 V DC output.

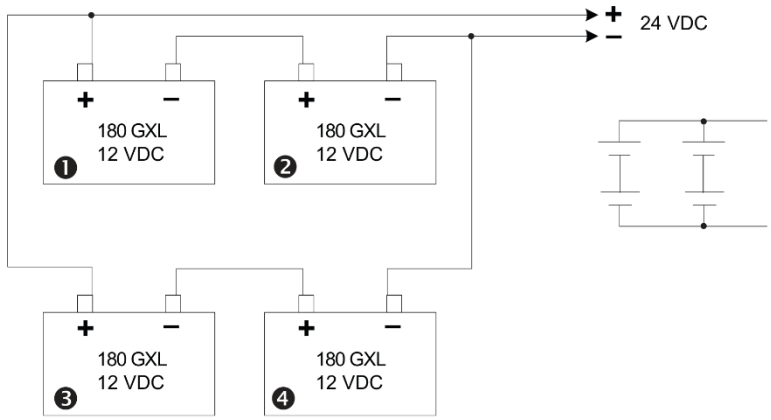

Figure 71 — Battery string example

The Peukert's number and capacity for the above configuration can be determined as follows:

1. Obtain the data sheet of the selected battery. See table below.
2. Find the current discharge ratings table in the data sheet. From the table, pick two current discharge values (I_1 and I_2) that are closest to the calculated load current value. Look up the two discharge hours (R_1 and R_2).

Current Discharge Ratings Table in Amps (end Voltage 1.75VPC)

Hours	1	2	3	4	6	8	10	12	20	24	48	72	100
215 Gold	67.8	40.5	29.1	22.9	16.1	12.6	10.2	8.7	5.46	4.61	Call*	Call*	Call*
210 GXL	66.3	39.6	28.5	22.4	15.8	12.3	10.0	8.54	5.34	4.51	Call*	Call*	Call*
190 Gold	64.5	37.1	26.6	20.8	14.6	11.4	9.4	7.9	4.96	4.2	2.2	1.5	1.08
180 GXL	61.2	35.2	25.2	19.7	13.9	10.8	8.9	7.5	4.7	4.0	2.1	1.4	1.03
85 GXL HP	33.2	18.8	13.3	10.4	7.34	5.70	4.68	3.97	2.50	2.12	1.11	0.76	0.56

* Call Alpha for current discharge ratings.

3. From the table, I1 = 13.9A, I2 = 10.8A, R1 = 6 hrs, R2 = 8 hrs.

   From Equation (1) earlier:

   $$\text{Peukert's number} = n = \frac{\text{Log}\,(R_2/R_1)}{(\text{Log}\,(I_1) - \text{Log}\,(I_2))}$$

   $$n = \frac{\text{Log}\,(8/6)}{\text{Log}\,(13.9) - \text{Log}\,(10.8)} = 1.14$$

   From Equation (2) earlier

   $$\text{Peukert's capacity} = (I_1)^n \times R_1 \quad \text{per battery}$$

   $$= (13.9)^{1.14} \times 6$$

   $$= 120.55 \text{ Ah per battery} \quad \text{..... (3)}$$

4. The Peukert's capacity for the series combination (Batteries #1 and #2) is 120.55 Ah.
5. The Peukert's capacity for the parallel combination (Batteries #1, #2 and #3, #4) is 2 x 120.55 Ah = 241.10 Ah.

A.5 Using the Spreadsheet

Download the spreadsheet “Peukert’s Parameters Calculator.xls” from www.alpha.ca website.

To determine Peukert's Number and Peukert's Capacity

This spreadsheet assists in determining the Peukert's parameters for a battery string and load. This data will be used by the FXM firmware 1.07 to estimate the battery run time remaining in back up mode (Invert mode)

Enter Battery String Voltage	24	VDC
Enter nominal load on inverter	275	Watts
Calculated nominal current	11.46	ADC

Enter the Battery voltage and nominal load

From the Current discharge table enter the 2 current discharge values (I_1 and I_2) closest to the calculated load current value and look up the 2 discharge hours (R_1 and R_2).

Discharge Current (I_1)	13.9	A
Rating 1 (R_1)	6	Hrs
Discharge Current (I_2)	10.8	A
Rating 2 (R_2)	8	Hrs

From the data sheet of the batteries enter the 2 closest currents and discharge hours

Peukert's Number = n	**1.140**
Peukert's Capacity per Battery =	**120.570**

Enter Number of Battery strings in Parallel	2

Enter the number of parallel strings

Peukert's Capacity for the Battery Bank =	**241.140**

CAUTION

The battery runtime is only an estimation and must not be relied on for critical applications. The battery runtime remaining is applicable only in inverter/backup mode.

Appendix B - Types of Triggers

There are 3 types of triggers:

B.1 Edge trigger

When the user input changes from one state to the other, the Alpha FXM is triggered to perform Action #1. If the level is set to High, the action will be triggered by a Low to High edge (leading edge). If the level is set to Low, the action will be triggered by the High to Low edge (falling edge).

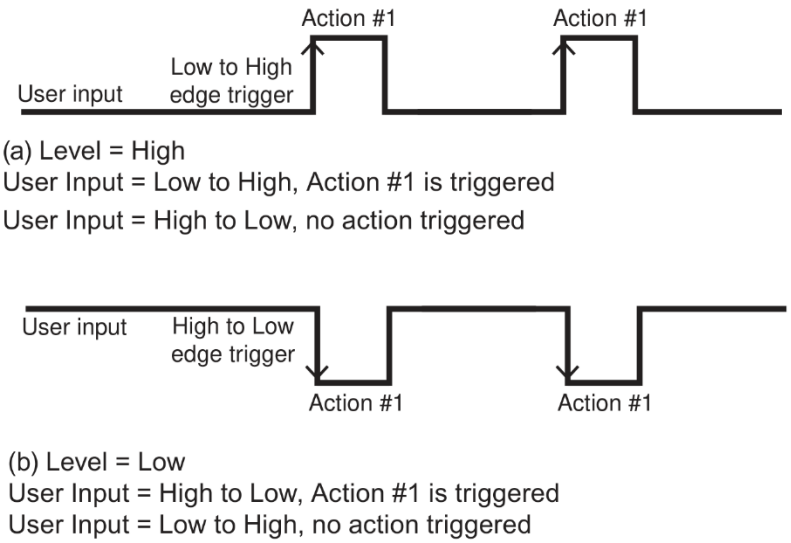

Figure 72 — Edge Trigger

B.2 Level Toggle

When the Level is set to High, the Alpha FXM is triggered to perform the other action when the user input changes from Low to High. If the input then changes from High to Low, Action #2 will be triggered. In other words, a level change in the user input will trigger an action toggle between Action #1 and #2.

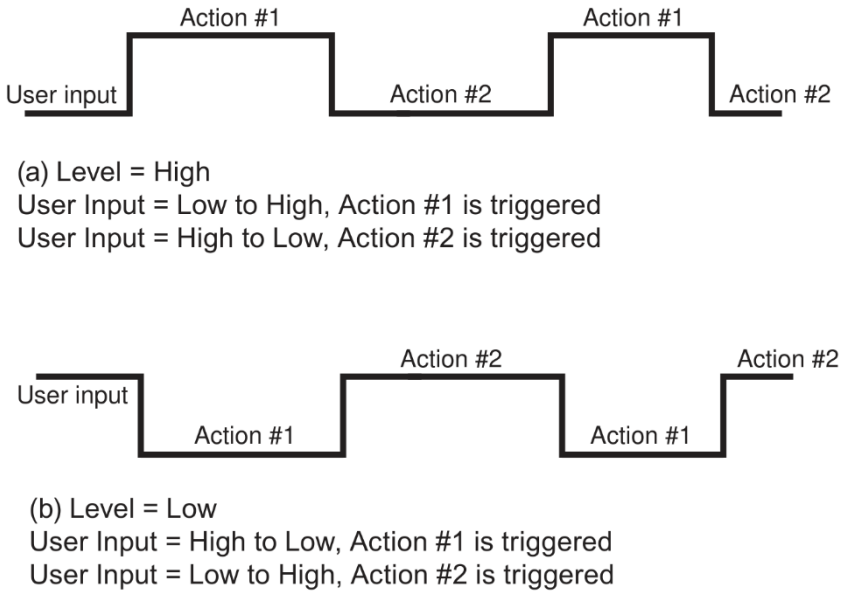

Figure 73 — Level Trigger

Level Alternative

When the level is set to High, the Alpha FXM is triggered to perform the next action when the user input changes from Low to High. If the input then changes from High to Low, no action will be triggered because the level is set to High. In other words, only a Low to High user input level triggers an action when Level is set to High. Similarly, when Level is set to Low, the Alpha FXM will trigger an action only with a High to Low user input.

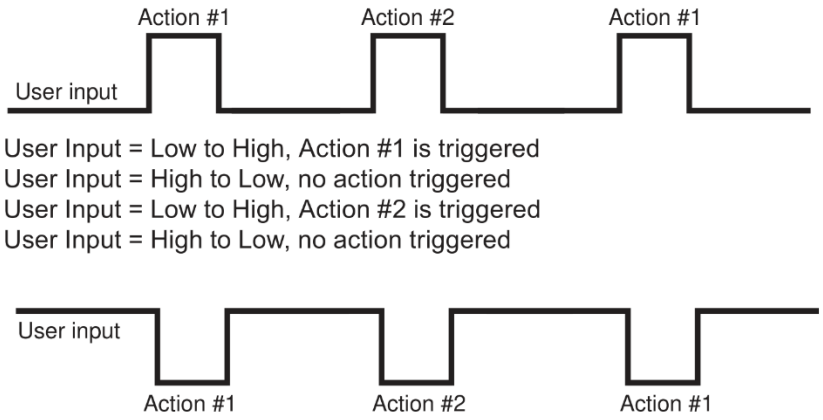

User Input = Low to High, Action #1 is triggered
User Input = High to Low, no action triggered
User Input = Low to High, Action #2 is triggered
User Input = High to Low, no action triggered

User Input = High to Low, Action #1 is triggered
User Input = Low to High, no action triggered
User Input = High to Low, Action #2 is triggered
User Input = Low to High, no action triggered

Figure 74 — Level Alternative

Service Contact

Your direct line to us

Worldwide Corporate Offices

Headquarter Germany
Hansastrasse 8
D-91126 Schwabach
Tel: +49 9122 79889 0

Mail: info@alpha-outback-energy.com

Eastern Europe
ee@alpha-outback-energy.com

Middle East
me@alpha-outback-energy.com

France and Benelux
fbnl@alpha-outback-energy.com

Spain
spain@alpha-outback-energy.com

Africa
africa@alpha-outback-energy.com

Alpha and Outback Energy GmbH reserves the right to make changes to the products and information contained in this document without notice. Copyright © 2020 Alpha and Outback Energy GmbH. All Rights reserved.

For more information, please visit **www.alpha-outback-energy.com**